# DMU02 Dynamics Measurement Unit

## GENERAL DESCRIPTION

The DMU02 combines MEMS angular rate and linear acceleration sensors to create a simple to use six-degrees-of-freedom dynamics measurement unit for complete motion sensing and control in three-dimensional space.

Using Silicon Sensing's proven MEMS ring gyro technology the DMU02 offers unsurpassed accuracy and reliability in an affordable and compact package. Angular rate and acceleration data is supplied by the DMU02 every millisecond to meet the needs of highly responsive control systems.

The DMU02 provides a cost-effective solution for a wide range of applications requiring a complete six-degrees-of-freedom motion sensing module.

DMU02 is simple to mount via 2 screws, optional alignment dowels and an 8-pin connector.

The SPI industry standard 4-wire interface provides access to the following data:

- Roll, pitch and yaw angular rates
- Longitudinal, lateral and vertical acceleration

USB based development equipment is available.

## FEATURES

- A compact six-degrees-of-freedom module, providing Roll, Pitch, Yaw angular rate plus Longitudinal, Lateral and Vertical translational acceleration
- Benchmark bias and scale factor performance
- Full scale dynamic range ±300º/s and ±6g
- Robust MEMS based strapdown system
- 1 cubic inch unit
- +5V supply
- Comprehensive Built In Test (BIT) for Angular Rate and Communication functions
- 4 wire industry standard SPI interface
- RoHS compliant

## APPLICATIONS

- Platform stabilisation and control
- Air, sea and land applications
- Robotics
- Antenna stabilisation
- Vehicle dynamic sensing
- Navigation aiding
- Autonomous vehicles (ROVs and UAVs)
- Laboratory
- Biomechanics

## ORDERING INFORMATION

| Model | Angular Rate Bandwidth | Angular Rate Range | Acceleration Bandwidth | Linear Acceleration |
|---|---|---|---|---|
| DMU02-01-0100 | 40 Hz | 300°/s | 400Hz | ±6g |
| | | | | |

| Model | Description |
|---|---|
| USB01-00-0100 | USB development equipment |
| | |

## FUNCTIONAL BLOCK DIAGRAM

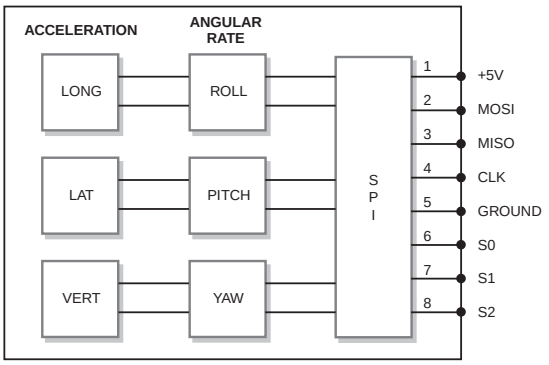




Supporting your great ideas www.pewatron.com
PEWATRON a member of the Angst + Pfister Group

# DMU02 Dynamics Measurement Unit

**Contents** **Page**


General Description ..... 1
Features ..... 1
Applications ..... 1
Ordering Information ..... 1
Functional Block Diagram ..... 1
Absolute Maximum Ratings ..... 3
Normal Operating Ratings ..... 3
ESD Sensitivity ..... 3
Environmental Requirements ..... 3
Radiated immunity BS EN61000-6-1 ..... 3
Radiated emissions BS EN61000-6-3 ..... 3
Specification ..... 4
Product Description ..... 5
- DMU02 Operation ..... 5
- Mechanical Configuration ..... 5
- Product Labelling ..... 7
- Connector pin-out ..... 7

Operation and Timing Specification ..... 7
- Serial Peripheral Interface Port ..... 7
- External System to DMU02 Messages ..... 9
- Self Test Capability ..... 10
- CBITA Function (Command BIT 3) ..... 10
- Product Environmental Management Compliance ..... 10

Glossary ..... 11
Safety and Indemnity Notices ..... 12
- Safety ..... 12
- Indemnity ..... 12
- Indemnity ..... 12




Supporting your great ideas www.pewatron.com PEWATRON a member of the Angst + Pfister Group

# DMU02 Dynamics Measurement Unit

## ABSOLUTE MAXIMUM RATINGS

| | |
|---|---|
| Operating Temperature | -40°C to +85°C |
| Storage Temperature | -55°C to +125°C |
| Maximum Operating Voltage | 6.0 V |
| Maximum Current on Start-up | 300 mA |
| Power Supply Ripple Requirement | <5 mV pk-pk in frequency range 100 Hz to 12 kHz |
| | <2 mV pk-pk in frequency range 12 kHz to 400 MHz |
| Reverse Power Supply Protection | 6 V for 1 second with a current limit of < 100 mA |

NOTE: Stresses beyond those listed under Absolute Maximum Ratings may cause permanent damage to the device. These are stress ratings only and functional operation of the device at these or other conditions beyond those indicated is not implied.

## NORMAL OPERATING RATINGS

| | |
|---|---|
| Operating Temperature | -40°C to +85°C |
| Supply Voltage | 5 V dc nominal, (4.75 V min, 5.25 V max continuous) |
| Supply Current | 200 mA maximum at 5.25 V across operating temperature after 1 s start up |

## ESD SENSITIVITY

The DMU02 device is rated to BS EN 61000-4-2 Level 3 8kV.

**ESD (Electrostatic Discharge) Sensitive Device**

This product may be damaged by ESD. Such damage may result in subtle performance or life degradation, or complete device failure. Appropriate storage and handling precautions should be taken at all times to avoid ESD damage.

## ENVIRONMENTAL REQUIREMENTS

| | | | | |
|---|---|---|---|---|
| Operational Vibration | $0.04g^2$/Hz | 10Hz - 2kHz | (8.8grms) | *Note 1 |
| Survival Vibration | $0.25g^2$/Hz | 20Hz - 2.5kHz | (25grms) | |
| Operational Shock | 95g 6ms | | | *Note 2 |
| Survival Shock | 1000g 1ms | | | |
| Do not drop onto a hard surface from a height exceeding 1000mm | | | | |
| Humidity | 35°C 85% RH max | | | |

## RADIATED IMMUNITY BS EN61000-6-1

Electric field 10 V/m from 80 MHz to 2 GHz

## RADIATED EMISSIONS BS EN61000-6-3

Frequency range 100 - 230 MHz - 30 dB(µV/m) at 10 m

Frequency range 230 - 1 GHz - 37 dB(µV/m) at 10 m

Note 1: Acceleration channels will saturate at axial inputs exceeding 6g pk.
Note 2: Recovery from saturation in <20ms



Supporting your great ideas www.pewatron.com PEWATRON a member of the Angst + Pfister Group

# DMU02 Dynamics Measurement Unit

## SPECIFICATION

### Angular rate function

| PARAMETER | UNITS | VALUE |
|---|---|---|
| Scale factor | °/s/lsb | 0.03125 |
| Full scale range | °/s | ± 300 |
| Scale factor over temperature (-40°C to +85°C) | % | ± 2.5 |
| Scale factor non linearity | % of FS | 0.15 |
| Bias over temperature | °/s | ±2.5 |
| Cross axis sensitivity | % | 3 |
| Bandwidth (-3dB) minimum | Hz | >40 |
| Noise in band | °/s rms | <0.5 |

### Linear acceleration function

| PARAMETER | UNITS | VALUE |
|---|---|---|
| Scale factor | mg/lsb | 3.66 |
| Full Scale range | g | ± 6 |
| Scale Factor sensitivity error (Vdd=5V ±5%, 23°C) | % | 5 |
| Scale Factor variation with temperature (-40°C to +85°C) | % | ± 2 |
| Scale Factor non linearity max | % of FS | 0.5 |
| Bias initial setting (at 23°C) max | mg | ±250 |
| Bias thermal gradient (-40°C to +85°C) max | mg/°C | ±5.5 |
| Offset Ratiometric error (Vdd=5V ±5%) | % | 1.5 |
| Cross axis sensitivity | % | 4 |
| Bandwidth (-3dB) minimum | Hz | 400 |
| Broadband Noise | mg rms | 15 |

| GENERAL PARAMETERS | UNITS | VALUE |
|---|---|---|
| Mass | gram | ≤17 |
| Start up time | ms | <500 |
| Power supply | Volts | 5 ±0.25 |
| Current | mA | ≤200 |
| Operating temperature range | °C | -40°C to +85°C |

NOTE: Specifications subject to change without notice.



Supporting your great ideas www.pewatron.com
PEWATRON a member of the Angst + Pfister Group

# DMU02 Dynamics Measurement Unit

## PRODUCT DESCRIPTION

This section describes the DMU02 operation, angular rate measurements and linear acceleration measurements.

### DMU02 Operation

The DMU02 comprises three rate sensors (gyroscopes) and accelerometers.

The normal mode of operation of the DMU02 provides inertial measurement data in the form of the Roll, Pitch and Yaw angular rates and the X, Y and Z linear accelerations. This data is aligned with the DMU02 co-ordinate set as defined in Figure 1 where arrow heads denote true acceleration.

Positive Roll, Pitch and Yaw angles (and angular rates) are defined as clockwise rotations when viewed along the positive X, Y and Z axis respectively.

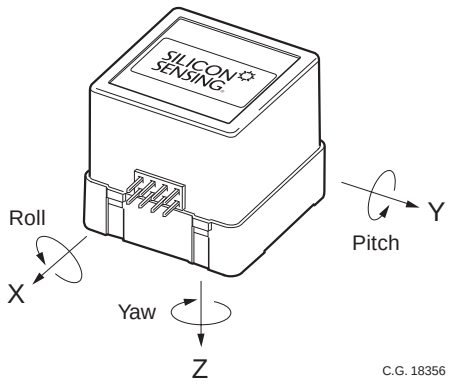


**Figure 1 Co-ordinate Set for the DMU02 System**

The DMU02 operates within 0.5 second from the application of power. The time at which power is applied is defined as the point in time when the DC voltage supplied to the DMU02 is within the range:

4.75V to 5.25V, nominal voltage 5V.

The DMU02 processes the sensor measurements at a maximum data rate of 3500 Hz (internal operation). Angular Rate and Linear Acceleration measurement data is available at a maximum data rate of 1.05 kHz per selected axis.

### Mechanical Configuration

The physical outline of the DMU02 configuration is detailed in Figure 2.

Details of the mounting arrangements are shown in Figure 3.

Particular note should be taken of the torque settings for the locating screens and of the maximum dowel height.

Electrostatic handling precautions are required.



Supporting your great ideas www.pewatron.com PEWATRON a member of the Angst + Pfister Group

# DMU02 Dynamics Measurement Unit

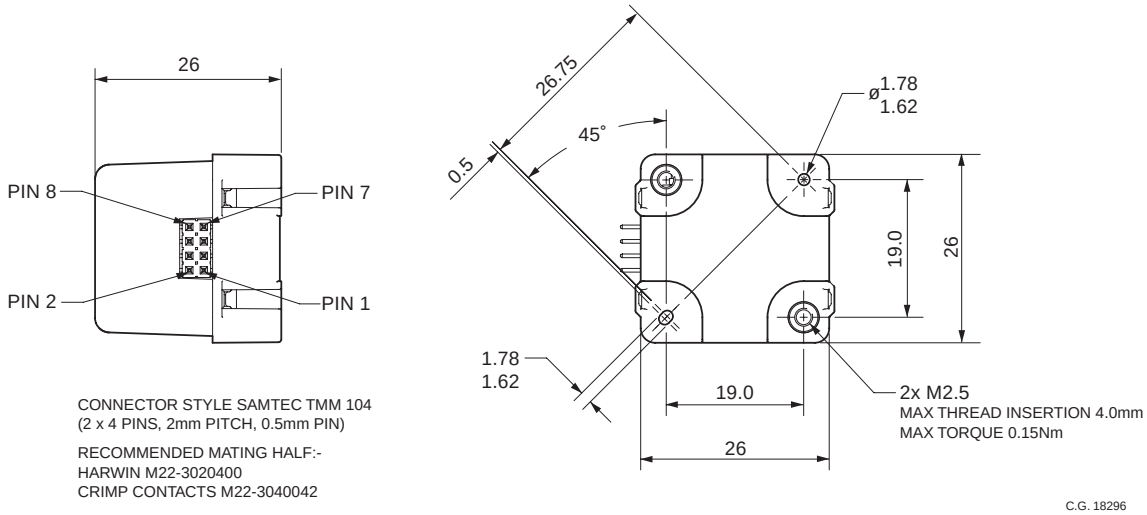


**Figure 2 DMU02 Physical Outline**

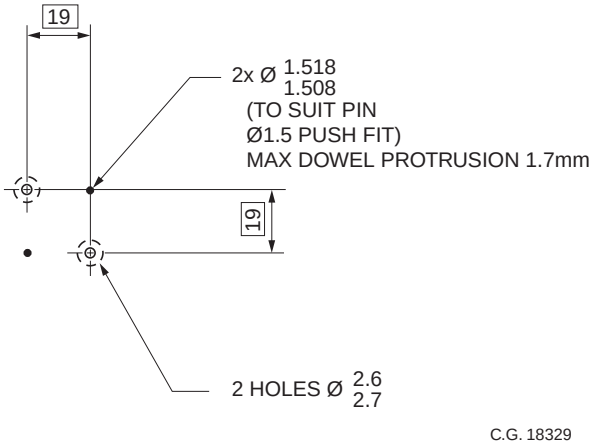


**Figure 3 DMU02 Mounting Detail**

Dimensions in mm



Supporting your great ideas www.pewatron.com
PEWATRON a member of the Angst + Pfister Group

# DMU02 Dynamics Measurement Unit

### Product Labelling

The DMU02 unit is externally labelled with the Company Logo (Silicon Sensing), Product Name, Part Number, Serial Number, and Date of Manufacture.

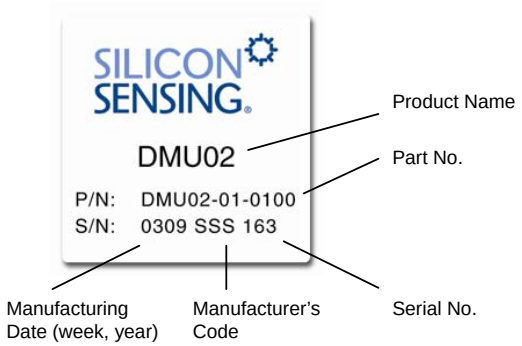


**Figure 4 DMU02 Label**

### Connector pin-out

The interface connector on the DMU02 is an 8-pin Header (Samtec part no TMM-104-06-L-D-SM) with the following pin-out:

Pin 1: Supply Positive
Pin 2: MOSI
Pin 3: MISO
Pin 4: CLK
Pin 5: GND
Pin 6: S0 (Pitch rate, Y acceleration)
Pin 7: S1 (Yaw rate, Z acceleration)
Pin 8: S2 (Roll rate, X acceleration)

Note: Pin 1, Pin 2, Pin 7 and Pin 8 are identified in the Physical Outline illustration (Figure 2).

## OPERATION AND TIMING SPECIFICATION

### Serial Peripheral Interface Port

CAUTION: Attempted operation of the SPI port without Vdd being in range 5V ±0.25V is NOT RECOMMENDED.

The DMU02 supports a single SPI port shared between each axis, the SPI port consists of the four signals.

- CLK
- MOSI
- MIS0
- SS (which can be either S0, S1 or S2), user selectable

The sharing of the single SPI port is arbitrated by three Slave Select (SS) lines, one for each axis, S0, S1 and S2. Only ***one*** SS can be active low at any one time. The permissible states are shown in Table 1.

**Slave Select Permissible States**

| S0 | S1 | S2 | Message content |
|---|---|---|---|
| 1 | 1 | 1 | Inactive |
| 0 | 1 | 1 | Pitch rate, Y acceleration |
| 1 | 0 | 1 | Yaw rate, Z acceleration |
| 1 | 1 | 0 | Roll rate, X acceleration |

The message count for each axis consists of 6 bytes of 8 bits. The full duplex nature of the SPI bus means that each selected axis receives a command at the same time as it outputs the rate and acceleration data.

To communicate with each axis, the relevant SS must be selected. There must be a minimum of 7 µs delay between selecting different SS ports, see the illustations below for details of these timings.

The table below gives the detailed timing information referenced from the illustrations below, which shows the details of the SPI port data structure.

**SPI Port Timing Information**

| Parameter | Min Value | Max Value | Unit | Description |
|---|---|---|---|---|
| $t_{CLK}$ | 0.8 | | µs | CLK_IN period. |
| $t_1$ | 5 | | µs | SPI_SEL to CLK_IN setup time. |
| $t_2$ | 0.4 x $t_{CLK}$ | | µs | CLK_IN high pulse width. |
| $t_3$ | 0.4 x $t_{CLK}$ | | µs | CLK_IN low pulse width. |
| $t_4$ | 1.1 | | µs | Delay between successive bytes. |
| $t_5$ | 7 | | µs | Delay between selecting SS lines. See Note 1 |
| $t_Q$ | 730 | | µs | Minimum quiet time required between SPI_SEL rising and start of next communication. See Note 2 |
| $_{Th}$ | 0 | | µs | SPI_SEL hold time after final clock |
| $_{Tm}$ | 53.5 | 270 | µs | Message duration. See Note 2 |
| $_{Ttot}$ | 950 | | µs | Repetition rate. See Note 2 |

Note 1: The toggling between the Slave Select will take a minimum of 7 µsec ($t_5$), the minimum time between the toggling of successive Slave Selects is t5+Ttot

Note 2: A quiet time (tq) between messages is required, and 3x( t1 + Tm + Th)+ tq = Ttot. Optimum performance is achieved with a repetition rate of 1ms. Select an appropriate Tclk to meet the requirements of Tm, and then adjust tq to give a Ttot of 1ms.



Supporting your great ideas www.pewatron.com PEWATRON a member of the Angst + Pfister Group

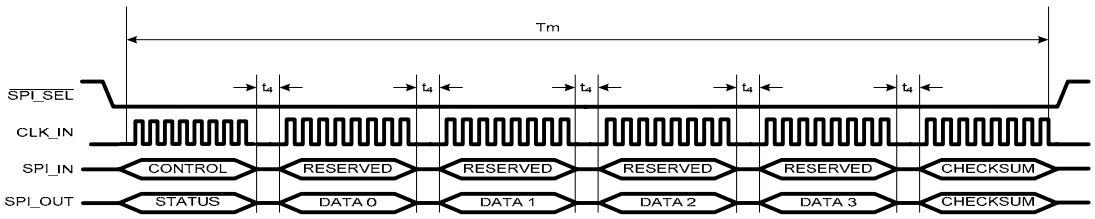


**Figure 5 SPI Data Timing Diagram**

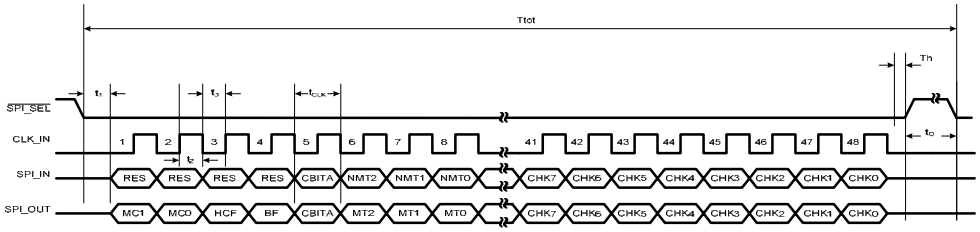


**Figure 6 SPI Data Frame Structure**

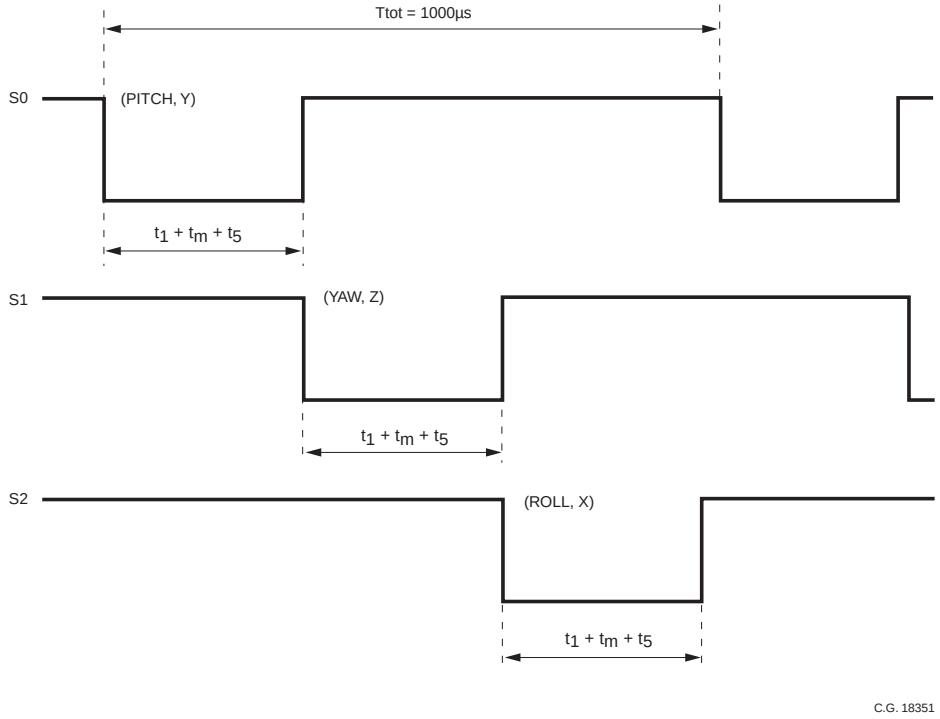


**Figure 7 SS (Slave Selection) Timing**

# DMU02 Dynamics Measurement Unit

## External System to DMU02 Messages

The data frames from the external system for each axis of the DMU02 are in the following format:

| Byte | Function |
|---|---|
| 0 | Control Byte |
| 1 | Reserved |
| 2 | Reserved |
| 3 | Reserved |
| 4 | Reserved |
| 5 | Checksum |

Control Byte:

| RES | RES | RES | RES | CBITA | NMT2 | NMT1 | NMT0 |
|---|---|---|---|---|---|---|---|

bit 7 bit 0

bit 7-4 **RES** : Reserved
Set to 0

bit 3 **CBITA** : Commanded Built In Test A
0 = Deactivate CBIT_A test
1 = Activate CBIT_A test (see CBITA function)

bit 2-0: **NMT2:NMT0** : Next Message Type
000 = Reserved
001 = Rate and Accelerometer sensor data
010 = Reserved
011 = Rate and Temperature sensor data
100 = Device Configuration 1 data
101 = Device Configuration 2 data
110 = Reserved
111 = Reserved

Reserved:

| RES | RES | RES | RES | RES | RES | RES | RES |
|---|---|---|---|---|---|---|---|

bit 7 Bit 0

bit 7-0 **RES** : Reserved
Set to '00' hex

Checksum:

| CHK7 | CHK6 | CHK5 | CHK4 | CHK3 | CHK2 | CHK1 | CHK0 |
|---|---|---|---|---|---|---|---|

bit 7 Bit 0

bit 7-0 **CHK7:CHK0** : Checksum
1's complement of the sum of bytes 0 – 4 (previous 5 bytes)

**Note**: If an incorrect message is received, the DMU02 axis selected will continue to transmit the message chosen in the last valid request.

Upon power up, the DMU02 will output the device configuration 1 message for all three axes until a valid control message is received on each axis.

## DMU02 to External System Messages

The data frames transmitted from the DMU02 to the external system are in the following format:

| Byte | Function |
|---|---|
| 0 | Status Byte |
| 1 | Data 0 MSB (Rate) |
| 2 | Data 1 LSB (Rate) |
| 3 | Data 2 MSB (Accelerometer) |
| 4 | Data 3 LSB (Accelerometer) |
| 5 | Checksum |

Each message from the DMU02 begins with a status byte contained in byte 0 and a checksum in byte 5. For all messages the following format is adopted, Bytes 0 to 4 are 2's compliment and Byte 5 is 1's compliment.

Status Byte:

| MC1 | MC0 | HCF | BF | CBITA | MT2 | MT1 | MT0 |
|---|---|---|---|---|---|---|---|

bit 7 bit 0

bit 7-6 **MC1:MC0** : Message Count
Incremented by the DMU02 each time the host system takes a message.

bit 5 **HCF** : Host communications fault
0 = No fault detected
1 = Communications fault detected

bit 4 **BF** : Built in test (BIT) fault
0 = Gyro output OK
1 = BIT Failure

bit 3 **CBITA** : CBITA active
0 = CBIT_A test inactive
1 = CBIT_A test in progress

bit 2-0 **MT2:MT0** : Message type
000 = Reserved
001 = Rate and Accelerometer
010 = Reserved
011 = Rate and Temperature sensor data
100 = Reserved
101 = Reserved

Checksum:

| CHK7 | CHK6 | CHK5 | CHK4 | CHK3 | CHK2 | CHK1 | CHK0 |
|---|---|---|---|---|---|---|---|

bit 7 bit 0

bit 7-0 **CHK7:CHK0** : Checksum
1's complement of the sum of bytes 0 – 4

Depending on the message type requested in NMT2:NMT0, the previous control byte from the host, the data bytes (*Data 3*: *Data 0*) in the subsequent data frame from the DMU02 contains the following data, indicated by NMT2:NMT0:

**Device Configuration 1 Message (NMT2:NMT0 = 100) – Default on power up**

| Byte | Function | Description |
|---|---|---|
| 0 | Status Byte | |
| 1 | Bits (7:4)<br>Bits (3:0) | Model rate range (e.g. 3 = 75°/s)<br>Model bandwidth (e.g. 1 = 100Hz) |
| 2 | Bits (7:4)<br>Bits (3:0) | Spare bits<br>Model variant |
| 3 | Software Version | Software variant number |
| 4 | Bits (7:5)<br>Bits (4:0) | Spare bits<br>Year of manufacture |
| 5 | Checksum | |

The Device Configuration 1 Message is the first message sent for each channel after that channel is selected

**Device Configuration 2 Message (NMT2:NMT0 = 101)**

| Byte | Function | Description |
|---|---|---|
| 0 | Status Byte | |
| 1 | Bits (7:4)<br>Bits (3:0) | Month of manufacture (3:0)<br>Package lot number (11:8) |
| 2 | Bits (7:0) | Package lot number (7:0) |
| 3 | Bits (7:6)<br>Bits (5:0) | Assembly plant (1:0)<br>Device serial number (13:8) |
| 4 | Bits (7:0) | Device serial number (7:0) |
| 5 | Checksum | |

Note: The contents of the two device configuration messages give each sensor a unique serial number.

Note: If an incorrect message is received, the DMU02 will continue to transmit the message chosen in the last valid request. Upon power up, the DMU02 will output the Device Configuration 1 message until a valid control signal is received.



Supporting your great ideas www.pewatron.com PEWATRON a member of the Angst + Pfister Group

# DMU02 Dynamics Measurement Unit

**Rate and Acceleration Message (NMT2:NMT0 = 001)**

| Byte | Function | Description |
|---|---|---|
| 0 | Status Byte | |
| 1 | Rate MS | Nominally ±350°/s FS 0.03125°/s/lsb |
| 2 | Rate LS | |
| 3 | Accelerometer MS | 3.66 mg/lsb |
| 4 | Accelerometer LS | |
| 5 | Checksum | |

**Rate and Temperature Sensor Message (NMT2:NMT0 = 011)**

| Byte | Function | Description |
|---|---|---|
| 0 | Status Byte | |
| 1 | Rate MS | Nominally ±350°/s FS 0.03125°/s/lsb |
| 2 | Rate LS | |
| 3 | Temperature MS | -50°C to 145°C, 0.125°C/lsb |
| 4 | Temperature LS | |
| 5 | Checksum | |

A typical message from the DMU02 to the external system could take the following form (output in Hex).

The status byte is a cyclic counter, and for the control byte of 01h sent, the returned status byte will be 01h after the first cycle, 41h for the second cycle 81h for the third cycle and a C1h for the last cycle. This message count is repeated each time the message counter is updated e.g. 01, 41h,81h, C1h, 01h, 41h, 81h……..

If the control byte 03h is sent, then the status byte returned would be, 03h, 43h, 83h C3h, 03h, 43h, 83h……

For a Control byte sent 01h (Rate and Acceleration Data).

Status message returned after 1 cycle:

| Byte 0 | Byte 1 | Byte 2 | Byte 3 | Byte 4 | Byte 5 |
|---|---|---|---|---|---|
| 01 | 22 | 60 | 02 | F4 | 86 |

This equates to a rate of 275°/s (bytes 1 and 2) and an acceleration of 2.8g (bytes 3 and 4). This would be repeated for the 3 axes.

The message could take the following format for Slave 0:

| Byte 0 | Byte 1 | Byte 2 | Byte 3 | Byte 4 | Byte 5 |
|---|---|---|---|---|---|
| 41 | 1F | 40 | 02 | 9A | C3 |

This equates to a rate of 250°/s (bytes 1 and 2) and an acceleration of 2.4g (bytes 3 and 4).

For Slave 1:

| Byte 0 | Byte 1 | Byte 2 | Byte 3 | Byte 4 | Byte 5 |
|---|---|---|---|---|---|
| 81 | F1 | 00 | 00 | D8 | B5 |

This equates to a rate of -120°/s (bytes 1 and 2) and an acceleration of 0.8g (bytes 3 and 4).

And for Slave 2:

| Byte 0 | Byte 1 | Byte 2 | Byte 3 | Byte 4 | Byte 5 |
|---|---|---|---|---|---|
| C1 | 09 | 60 | FE | 08 | CF |

This equates to a rate of 75°/s (bytes 1 and 2) and an acceleration of -1.9g (bytes 3 and 4).

## Self Test Capability

During operation, each rate axis of the DMU02 is checked for signal integrity. The CBITA command can be used to place each selected axis of the DMU02 into self test mode.

## CBITA Function (Command BIT 3)

CBITA (Software Command) is only applicable to the Rate channels (Pitch, Yaw and Roll axis); there is no self test for the Acceleration channels.

The DMU02 has the ability to carry out a commanded built in test (CBITA) on each channel independently. This is used as a test to ensure the device is functioning correctly by exercising the rate MEMS structure, the rate sensing loops and drive and the pickoff electronics. CBITA works by applying an offset to the loops running inside the rate sensor, which results in a 10°/s offset bias in the rate output. The timing of the offset in relation to the state of the CBITA command is shown in Figure 8.

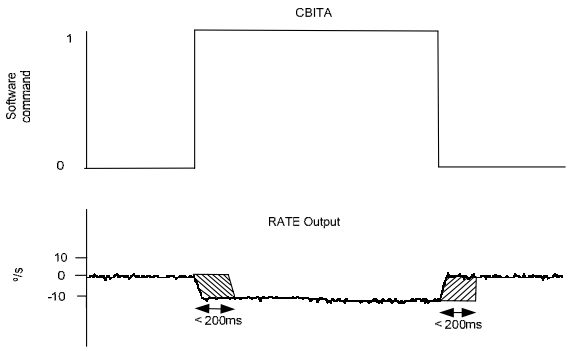


**Figure 8 CBITA Timing**

CBITA Logic Levels

| | |
|---|---|
| CBITA = 0 | The CBITA test will be disabled. |
| CBITA = 1 | The DMU02 will initiate a CBITA test, in which a nominal offset bias of 10°/s will be applied to the rate output of the SPI port selected. |

## Product Environmental Management Compliance

The DMU02 complies with the requirements of the RoHS and WEEE directives.



Supporting your great ideas www.pewatron.com PEWATRON a member of the Angst + Pfister Group

# DMU02 Dynamics Measurement Unit

## GLOSSARY

| | |
|---|---|
| A | Amperes |
| BIT | Built-in-Test |
| CLK | Clock |
| CofG | Centre of Gravity |
| COSHH | Control Of Substances Hazardous to Health |
| COTS | Commercial off the Shelf |
| DMU02 | SSS Dynamics Measurement Unit |
| DOF | Degrees of Freedom |
| ESD | Electrostatic Discharge |
| GND | Ground |
| ISO | International Organisation for Standardisation |
| LSB | Least Significant Byte |
| MISO | Master Input, Slave Output |
| MOSI | Master Output, Slave Input |
| MS | Microsoft® |
| MSB | Most Significant Byte |
| RoHS | Restriction of Hazardous Substances |
| RMS | Root Mean Square |
| ROW | Rest of the World |
| SPI | Serial Peripheral Interface |
| TBA | To Be Agreed |
| TBD | To Be Determined |
| USB | Universal Serial Bus |
| WEEE | The Waste Electrical and Electronic Equipment Directive |
| XYZ | Linear Acceleration Measurements in X, Y and Z (g) Axes |



Supporting your great ideas www.pewatron.com PEWATRON a member of the Angst + Pfister Group

# DMU02 Dynamics Measurement Unit

## SAFETY AND INDEMNITY NOTICES

### Safety

The DMU02 has not been designed for use in safety critical applications.

The DMU02 provides inertial information in terms of angular rate and linear acceleration. This information is provided in a digital format. No checks are performed within the DMU02 on the correctness or integrity of the data sent. The integrity of this digital information shall be considered at the next highest assembly and appropriate actions taken at that level.

The DMU02 shall be provided with electrical power from a low voltage supply. The internal electronics of the DMU02 shall operate from the low voltage supply and shall not produce any hazardous voltages.

The DMU02 is designed to be low maintenance.

The DMU02 has no sharp edges.

The DMU02 does not contain any hazardous materials as defined in both the UK and European legislation.

The DMU02 is marked indicating that it could be susceptible to electrostatic discharge damage and that any documentation supplied shall state that precautions for handling electrostatic sensitive devices shall be followed.

The product should not be used in any application where any undetected functional or other failure or performance deterioration would cause a safety hazard, including but not limited to hazards caused by EMC susceptibility or emissions.

### Indemnity

**Indemnity**

**Indemnity Notice SE Asia, ROW**

User and/or Purchaser (Customer) shall indemnify and hold Silicon Sensing Systems Japan Limited ("SSSJL"), Silicon Sensing Systems Limited ("SSSL") and its affiliates, including its members, shareholders, managers, directors, officers, employees, agents and representatives, harmless from and against any and all liabilities, claims, demands, actions, costs or expenses (including all reasonable legal or litigation costs), by whomever asserted and regardless of nature or kind, including without limitation and/or product liability claims arising from the use of any product supplied by SSSJL ("Product") to (Customer), claims for personal injuries (including death) and damage to property, whether in tort or under contract, directly or indirectly, in whole or in part, attributed to or arising from the use by (Customer) of any Product supplied by SSSJL to (Customer) for any purpose (whether relating to any defect in material, workmanship or design) including but without limitation, installing the Product on a product, equipment or vehicle of any kind, or using the Product for training or simulation purposes in relation to a product, equipment or vehicle of any kind, or using the Product for the support and maintenance of a product, equipment or vehicle of any kind. SSSJL shall promptly notify (Customer) of any such claim for which an indemnity will be sought. (Customer) shall have the right at its expense to assume control the defence of such claims and SSSJL shall provide reasonable co-operation and information to (Customer) in order for (Customer) to defend the claims. (Customer) may not settle any such claim without the prior written consent of SSSJL, which consent may not be unreasonably withheld. Product supplied by SSSJL is not warranted in any way for any period regardless of the existing laws and/or regulations unless agreed in writing by and between SSSJL and (Customer) prior to purchasing the Product. SSSJL, SSSL or its affiliates reserve the right to make changes without further notice to any Products herein. SSSJL, SSSL or its affiliates make no warranty, representation or guarantee regarding the suitability of its Products for any particular purpose, nor does SSSJL,SSSL or its affiliates assume any liability arising out of the application or use of any product or circuit, and specifically disclaims any and all liability, including without limitation indirect, consequential or incidental damages. "Typical" parameters which may be provided in SSSJL datasheets and/or specifications can and do vary in different applications and actual performance may vary over time. All operating parameters, including "Typical" must be validated for each customer application by customer's technical experts. SSSJL does not convey any licence under its patent rights nor the rights of others.

**Indemnity Notice Europe, USA, ROW**

User and/or Purchaser (Customer) shall indemnify and hold Silicon Sensing Systems Limited ("SSSL") and its affiliates, including its subsidiaries, members, shareholders, managers, directors, officers, employees, agents and representatives, harmless from and against any and all liabilities, claims, demands, actions, costs or expenses (including all reasonable legal or litigation costs), by whomever asserted and regardless of nature or kind, including without limitation and/or product liability claims arising from the use of any product supplied by SSSL ("Product") to (Customer), claims for personal injuries (including death) and damage to property, whether in tort or under contract, directly or indirectly, in whole or in part, attributed to or arising from the use by (Customer) of any Product supplied by SSSL to (Customer) for any purpose (whether relating to any defect in material, workmanship or design) including but without limitation, installing the Product on a product, equipment or vehicle of any kind, or using the Product for training or simulation purposes in relation to a product, equipment or vehicle of any kind, or using the Product for the support and maintenance of a product, equipment or vehicle of any kind. SSSL shall promptly notify (Customer) of any such claim for which an indemnity will be sought. (Customer) shall have the right at its expense to assume control the defence of such claims and SSSL shall provide reasonable co-operation and information to (Customer) in order for (Customer) to defend the claims. (Customer) may not settle any such claim without the prior written consent of SSSL, which consent may not be unreasonably withheld. Product supplied by SSSJL is not warranted in any way for any period regardless of the existing laws and/or regulations unless agreed in writing by and between SSSL and (Customer) prior to purchasing the Product. SSSL reserves the right to make changes without further notice to any products herein. SSSL makes no warranty, representation or guarantee regarding the suitability of its products for any particular purpose, nor does SSSL assume any liability arising out of the application or use of any product or circuit, and specifically disclaims any and all liability, including without limitation consequential or incidental damages. "Typical" parameters which may be provided in SSSL datasheets and/or specifications can and do vary in different applications and actual performance may vary over time. All operating parameters, including "Typical" must be validated for each customer application by customer's technical experts. SSSL does not convey any licence under its patent rights nor the rights of others.

**+44 1752 723330 • Fax: +44 1752 723331**
**+81 6 6489 5868 • Fax: +81 6 6489 5910**
**+1 203 250 3699 • Fax: +1 203 250 8047**
sales@siliconsensing.com • www.siliconsensing.com



Supporting your great ideas www.pewatron.com PEWATRON a member of the Angst + Pfister Group

PEWATRON
a member of the Angst + Pfister Group

# We are here for you. Addresses and Contacts

## Sales Switzerland

Postcode 3000 – 9999
Liechtenstein

Matthias Rüegg
Ruhbergstrasse 32
CH-9230 Flawil

Phone + 41 44 877 35 18
Mobile + 41 76 491 66 66
Fax + 41 44 877 35 19

matthias.rueegg@pewatron.com

Postcode 1000 – 2999

Raffael Favaretto
Route d'Oron 124
CH-1673 Promasens

Phone + 41 44 877 35 22
Mobile + 41 76 444 63 14
Fax + 41 44 877 35 23

raffael.favaretto@pewatron.com

## Sales Germany

Postcode 60000 – 79999

Dieter Hirthe
Mühlweg 23
D-71554 Weissach i.T.

Phone + 49 719 149 60 58
Mobile + 49 163 762 74 30
Fax + 49 719 193 31 88

dieter.hirthe@pewatron.com

Postcode 10000 – 59999
Postcode 80000 – 99999

Kurt Stritzelberger
Neumarkter Str. 86a
D-81673 Munich

Phone + 49 89 260 38 47
Mobile + 49 171 803 41 35
Fax + 49 89 43 10 91 91

kurt.stritzelberger@pewatron.com

Key Accounts
Aerospace and Defence

Claus Wübbena
Vogelkamp 26
D-26655 Westerstede

Phone + 49 4488 5204 614
Mobile + 49 173 9700 691
Fax + 49 4488 5204 616

claus.wuebbena@pewatron.com

## Sales Austria

Kurt Stritzelberger
Neumarkter Str. 86a
D-81673 Munich

Phone + 49 89 260 38 47
Mobile + 49 17 18 03 41 35
Fax + 49 89 43 10 91 91

kurt.stritzelberger@pewatron.com

## Sales Other Countries / Product Management

### Sensors

Physical Sensors
Data Acquisition

Peter Felder
Phone + 41 44 877 35 05
peter.felder@pewatron.com

Geometrical Sensors

Eric Letsch
Phone + 41 44 877 35 14
eric.letsch@pewatron.com

### Power Supplies

DC-DC Converters
Switching Power Supplies
DC-AC Inverters

Sebastiano Leggio
Phone + 41 44 877 35 06
sebastiano.leggio@pewatron.com

### E-Components

Current Sensors
Man Machine Interface
Measurement Probes

Sebastiano Leggio
Phone + 41 44 877 35 06
sebastiano.leggio@pewatron.com

PEWATRON AG
Thurgauerstrasse 66
CH-8052 Zurich

Phone + 41 44 877 35 00
Fax + 41 44 877 35 25

www.pewatron.com
info@pewatron.com