SILICON SENSING®

CRG20
Angular Rate Sensor

CRG20 uses the latest (capacitive) silicon MEMS sensor technology from Silicon Sensing. The gyro is optimised for high-volume production programmes where both performance and cost are key drivers.

This new 'gyro on a chip' is derived from Silicon Sensing's high volume supply to the automotive industry, now being made available to broader markets. To aid initial evaluation, a range of development tools is available, from simple break-out boards to USB-based PC interface boards.

Fully digital closed loop control eliminates any temperature and aging effects associated with analogue electronics, and provides exceptionally stable performance over a wide range of operating conditions.

CRG20 is underpinned by Silicon Sensing's commitment to the technical backup and long-term support necessary to major procurement programmes.

Key Features

- Affordable high-volume solution
- Leadless Chip Carrier construction
- Supplied on tape and reel
- Excellent performance over temperature
- Integrated temperature sensor
- Digital (SPI®) and analogue outputs
- Development facilities available
- Several rate range options
- Electronically-readable serial number

© Silicon Sensing is an Atlantic Inertial Systems, Sumitomo Precision Products joint venture company

CRG20
Angular Rate Sensor

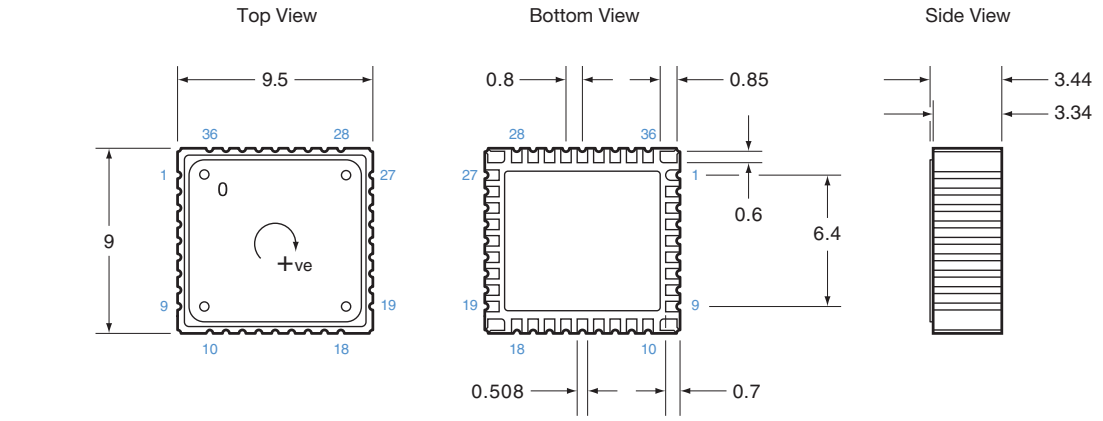

All measurements in millimetres.

Typical Data

	CRG20 all varients	CRG20-01	CRG20-02 CRG20-22
Output format	Digital (SPI)	Analogue voltage (ratiometric)	
Rate Range	± 300°/s	± 75°/s	±300°/s
Scale Factor			
Nominal	0.03125°/bit	26.67mV/°/s	6.67mV/°/s
Variation over temperature range	< ±0.7%	0.9%	
Nonlinearity	< ±0.06%	< ±0.1%	
Bias			
Variation over temperature range	< ±0.4°/s	< ±1.0°/s	< ±1.0°/s
Angular Random Walk	0.3°/rt hr		
Bias instability	5°/hr		
Bandwidth (typical)	≤ 40Hz (CRG20-1), ≤ 75Hz (CRG20-02), ≤ 90Hz (CRG20-22)		
Quiescent Noise			
1 to 25Hz	0.2°/s rms	0.3°/s rms	
Environment			
Temperature (operating)	–40°C to +105°		
Linear acceleration	< 100g		
Shock	95g		
Vibration	9g rms (20Hz to 2kHz, random)		
Cross-axis sensitivity	< +2%		
Mass	0.8 gram		
Electrical			
Supply voltage (–20°C to +80°C)	+4.75V to +5.25V		
Supply current	60mA		
Noise and ripple	< 5mV peak to peak		
Start-up time	< 0.5s		
RoHS Compliant	Yes		

Development facilities available
please enquire

Silicon Sensing Systems Limited
Clittaford Road Southway
Plymouth Devon
PL6 6DE United Kingdom

T: +44 (0)1752 723330
F: +44 (0)1752 723331
E: sales@siliconsensing.com
W: siliconsensing.com

Silicon Sensing Systems Japan Limited
1-10 Fuso-Cho
Amagasaki
Hyogo 6600891 Japan

T: +81 (0)6 6489 5868
F: +81 (0)6 6489 5919
E: sssj@spp.co.jp
W: siliconsensing.com

Specification subject to change without notice.

© Copyright 2009
Silicon Sensing Systems Limited
All rights reserved.
Printed in England 12/09

Silicon Sensing Systems Limited Registered in England & Wales No. 3635234 Clittaford Road, Southway, Plymouth, Devon PL6 6DE
The device mark Silicon Sensing is a registered trade mark of Silicon Sensing Systems Community Trade Mark 003587664

CRG20-00-0100-131 Rev 3
DCR No. 620000255

PEWATRON
a member of the Angst + Pfister Group

We are here for you. Addresses and Contacts

Sales Switzerland

Postcode 3000 – 9999
Liechtenstein

Matthias Rüegg
Ruhbergstrasse 32
CH-9230 Flawil

Phone + 41 44 877 35 18
Mobile + 41 76 491 66 66
Fax + 41 44 877 35 19

matthias.rueegg@pewatron.com

Postcode 1000 – 2999

Raffael Favaretto
Route d'Oron 124
CH-1673 Promasens

Phone + 41 44 877 35 22
Mobile + 41 76 444 63 14
Fax + 41 44 877 35 23

raffael.favaretto@pewatron.com

Sales Germany

Postcode 60000 – 79999

Dieter Hirthe
Mühlweg 23
D-71554 Weissach i.T.

Phone + 49 719 149 60 58
Mobile + 49 163 762 74 30
Fax + 49 719 193 31 88

dieter.hirthe@pewatron.com

Postcode 10000 – 59999
Postcode 80000 – 99999

Kurt Stritzelberger
Neumarkter Str. 86a
D-81673 Munich

Phone + 49 89 260 38 47
Mobile + 49 171 803 41 35
Fax + 49 89 43 10 91 91

kurt.stritzelberger@pewatron.com

Key Accounts
Aerospace and Defence

Claus Wübbena
Vogelkamp 26
D-26655 Westerstede

Phone + 49 4488 5204 614
Mobile + 49 173 9700 691
Fax + 49 4488 5204 616

claus.wuebbena@pewatron.com

Sales Austria

Kurt Stritzelberger
Neumarkter Str. 86a
D-81673 Munich

Phone + 49 89 260 38 47
Mobile + 49 17 18 03 41 35
Fax + 49 89 43 10 91 91

kurt.stritzelberger@pewatron.com

Sales Other Countries / Product Management

Sensors

Physical Sensors
Data Acquisition

Peter Felder
Phone + 41 44 877 35 05
peter.felder@pewatron.com

Geometrical Sensors

Eric Letsch
Phone + 41 44 877 35 14
eric.letsch@pewatron.com

Power Supplies

DC-DC Converters
Switching Power Supplies
DC-AC Inverters

Sebastiano Leggio
Phone + 41 44 877 35 06
sebastiano.leggio@pewatron.com

E-Components

Current Sensors
Man Machine Interface
Measurement Probes

Sebastiano Leggio
Phone + 41 44 877 35 06
sebastiano.leggio@pewatron.com

PEWATRON AG
Thurgauerstrasse 66
CH-8052 Zurich

Phone + 41 44 877 35 00
Fax + 41 44 877 35 25

www.pewatron.com
info@pewatron.com