SILICON SENSING®

SiRRS01

Angular Rate Sensor

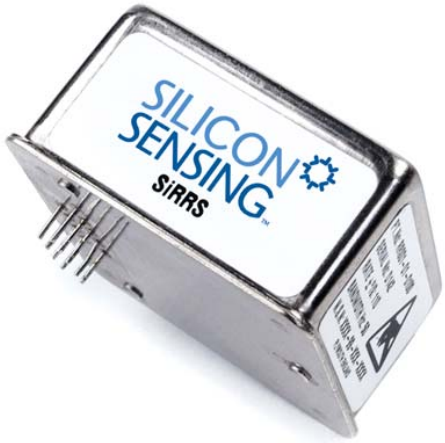

The SiRRS01 angular rate sensor has evolved from the highly successful Vibrating Structure Gyroscope developed by BAE Systems, which has been in service since 1990.

This MEMS implementation of our VSG technology, offers continued advancement in miniaturisation and reliability.

Designed to provide high performance operation under harsh environmental conditions, the SiRRS01 is ideally suited for a wide range of applications.

The SiRRS01 is underpinned by Silicon Sensing's commitment to the technical backup and long term support necessary for major procurement programmes.

Key Features

- Micro machined silicon (MEMS) technology
- Affordable, robust and rugged design
- Hermetically sealed
- Excellent shock and vibration performance
- Long life and exceptional reliability
- Comprehensive Built In Test (BIT)
- Integrated temperature sensor
- Compact and lightweight
- Low power consumption
- Sensor modelling data available

© Silicon Sensing is an Atlantic Inertial Systems, Sumitomo Precision Products joint venture company

SiRRS01
Angular Rate Sensor

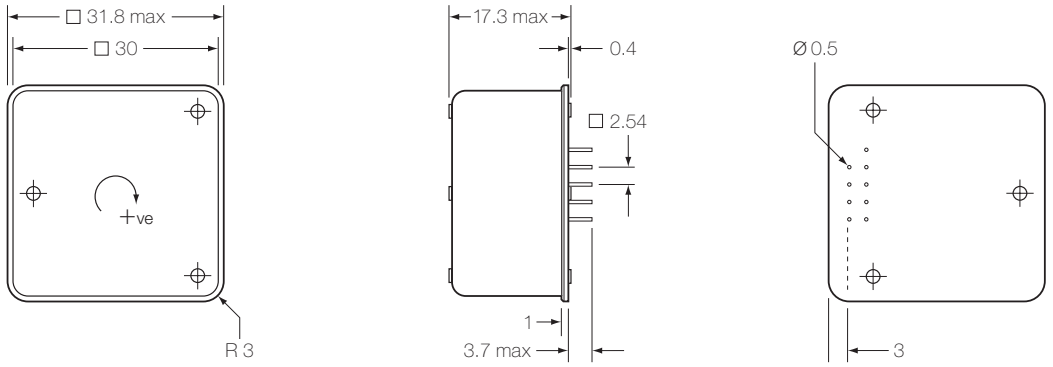

All measurements in millimetres.

Typical Data

	RRS01-01
Angular Rate Range	±110°/s (other ranges available - see table)
Scale Factor	
Nominal	18.18mV/°/s
Variation over temperature range	< ±3%
Nonlinearity	±1% of full scale
Repeatability	±0.05% 1σ
Bias	
Setting (at +20°C)	< ±0.3°/s
Variation over temperature range	< ±3°/s
Instability	3°/hr
Repeatability	±0.03°/s 1σ
Angular random walk	< 0.2°/√hr
g sensitivity	< 7°/hr/g
Bandwidth	> 50Hz (90° phase)
Noise (in-band)	< 0.35°/s rms
Environment	
Operating temperature	−40°C to +75°C
Relative humidity	100%
Shock (operational)	60g (30ms, ½ sine)
Vibration (operational)	10g rms (20Hz to 2kHz)
Mass	< 35 gram
Electrical	
Supply voltage	±5V, 0V
Supply current	< 50mA (each, steady state)
General	
Built In Test (BIT)	Command BIT, Alarm BIT
Start-up time	300ms
Temperature output	16.9mV/°/s (0V at 25°C)
MTBF	300,000 hr
RoHS Compliance	No

Part Number	Rate Range
RRS01-01	±110°/s
RRS01-03	±300°/s
RRS01-05	±50°/s
RRS01-07	±1,500°/s
RRS01-09	±200°/s

Pin Connections

		9	Case Ground
−5V	**4**	**8**	Rate Reference
Command BIT	**3**	**7**	Rate Output
Alarm BIT	**2**	**6**	0V
+5V	**1**	**5**	Temperature

Silicon Sensing Systems Limited
Clittaford Road Southway
Plymouth Devon
PL6 6DE United Kingdom

T: +44 (0)1752 723330
F: +44 (0)1752 723331
E: sales@siliconsensing.com
W: siliconsensing.com

Silicon Sensing Systems Japan Limited
1-10 Fuso-Cho
Amagasaki
Hyogo 6600891 Japan

T: +81 (0)6 6489 5868
F: +81 (0)6 6489 5919
E: sssj@spp.co.jp
W: siliconsensing.com

Specification subject to change without notice.

© Copyright 2009
Silicon Sensing Systems Limited
All rights reserved.
Printed in England 02/09

Silicon Sensing Systems Limited Registered in England & Wales No. 3635234 Clittaford Road, Southway, Plymouth, Devon PL6 6DE
The device mark Silicon Sensing is a registered trade mark of Silicon Sensing Systems Community Trade Mark 003587664

PEWATRON
a member of the Angst + Pfister Group

We are here for you. Addresses and Contacts

Sales Switzerland

Postcode 3000 – 9999
Liechtenstein

Matthias Rüegg
Ruhbergstrasse 32
CH-9230 Flawil

Phone + 41 44 877 35 18
Mobile + 41 76 491 66 66
Fax + 41 44 877 35 19

matthias.rueegg@pewatron.com

Postcode 1000 – 2999

Raffael Favaretto
Route d'Oron 124
CH-1673 Promasens

Phone + 41 44 877 35 22
Mobile + 41 76 444 63 14
Fax + 41 44 877 35 23

raffael.favaretto@pewatron.com

Sales Germany

Postcode 60000 – 79999

Dieter Hirthe
Mühlweg 23
D-71554 Weissach i.T.

Phone + 49 719 149 60 58
Mobile + 49 163 762 74 30
Fax + 49 719 193 31 88

dieter.hirthe@pewatron.com

Postcode 10000 – 59999
Postcode 80000 – 99999

Kurt Stritzelberger
Neumarkter Str. 86a
D-81673 Munich

Phone + 49 89 260 38 47
Mobile + 49 171 803 41 35
Fax + 49 89 43 10 91 91

kurt.stritzelberger@pewatron.com

Key Accounts
Aerospace and Defence

Claus Wübbena
Vogelkamp 26
D-26655 Westerstede

Phone + 49 4488 5204 614
Mobile + 49 173 9700 691
Fax + 49 4488 5204 616

claus.wuebbena@pewatron.com

Sales Austria

Kurt Stritzelberger
Neumarkter Str. 86a
D-81673 Munich

Phone + 49 89 260 38 47
Mobile + 49 17 18 03 41 35
Fax + 49 89 43 10 91 91

kurt.stritzelberger@pewatron.com

Sales Other Countries / Product Management

Sensors

Physical Sensors
Data Acquisition

Peter Felder
Phone + 41 44 877 35 05
peter.felder@pewatron.com

Geometrical Sensors

Eric Letsch
Phone + 41 44 877 35 14
eric.letsch@pewatron.com

Power Supplies

DC-DC Converters
Switching Power Supplies
DC-AC Inverters

Sebastiano Leggio
Phone + 41 44 877 35 06
sebastiano.leggio@pewatron.com

E-Components

Current Sensors
Man Machine Interface
Measurement Probes

Sebastiano Leggio
Phone + 41 44 877 35 06
sebastiano.leggio@pewatron.com

PEWATRON AG
Thurgauerstrasse 66
CH-8052 Zurich

Phone + 41 44 877 35 00
Fax + 41 44 877 35 25

www.pewatron.com
info@pewatron.com