measurement SPECIALTIES

Model 52 Accelerometer

DC Response
Miniature
Low Cost
Reliable Performance

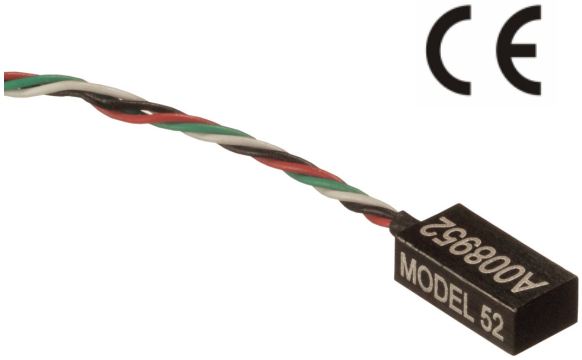

The Model 52 Accelerometer

is based on an advanced piezoresistive MEMS sensing element which offers exceptional dynamic range and stability. This unit features a full bridge output configuration with an operating temperature range from -40 to +121ºC. A slight amount of internal gas damping provides outstanding shock survivability and a flat amplitude/phase response up to 7kHz.

dimensions

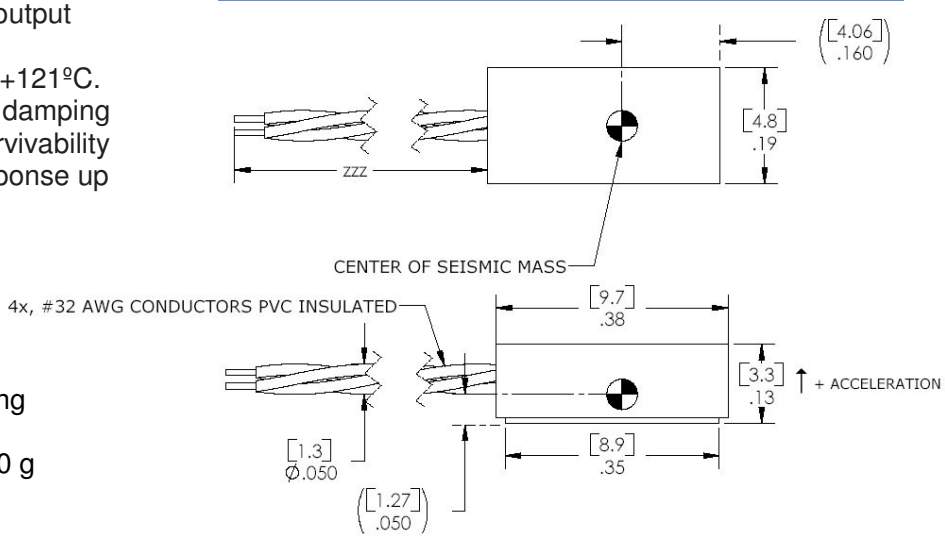

FEATURES

- 2nd GEN MEMS Sensing Element
- 50, 200, 500 and 2,000 g Ranges
- 2-10 Vdc Excitation
- <± 50 mV Zero Offset

APPLICATIONS

- Safety Impact Testing
  - Auto
  - Truck
  - Recreational Vehicles
- Shock Testing

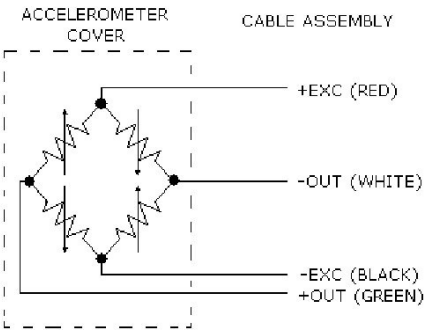

32 Journey Ste. 150 Aliso Viejo, CA 92656 949-716-5377 enduser@meas-spec.com

Supporting your great ideas www.pewatron.com PEWATRON a member of the Angst + Pfister Group

Model 52 Accelerometer

performance specifications

All values are typical at ±24℃, 100 Hz and 10 Vdc excitation unless otherwise stated. Measurement Specialties reserves the right to update and change these specifications without notice.

Parameters					
DYNAMIC					**Notes**
Range(g)	±50	±200	±500	±2000	
Sensitivity (mV/g)	2	0.9	0.4	0.15	
Frequency Response (Hz)	0-400	0-800	0-1200	0-2000	±2%
	0-1000	0-2000	0-3000	0-5000	±5%
	0-1400	0-2800	0-4200	0-7000	±1dB
Resonant Frequency (Hz)	4000	8000	15000	26000	
Non-Linearity (% FSO)	±1	±1	±1	±1	
Transverse Sensitivity (%)	<3	<3	<3	<3	
Thermal Zero Shift (%FSO/℃)	±0.2	±0.2	±0.2	±0.2	From 0 to +50℃
Thermal Sensitivity Shift (%/℃)	±0.4	±0.4	±0.4	±0.4	From 0 to +50℃
ELECTRICAL					
Zero Acceleration Output (mV)	<±50	<±50	<±50	<±50	
Excitation (Vdc)	2 to 10	2 to 10	2 to 10	2 to 10	
Input Resistance	3500-4800	3500-4800	3500-4800	3500-4800	
Output Resistance (Ω)	2700-4800	2700-4800	2700-4800	2700-4800	
Insulation Resistance (MΩ)	>100	>100	>100	>100	@50Vdc
ENVIRONMENTAL					
Shock Limit (g)	5000	5000	5000	5000	
Operating Temperature (℃)	-40 to +121	-40 to +121	-40 to +121	-40 to +121	
Humidity	Epoxy Sealed				
PHYSICAL					
Case Material	Plastic				
Cable (Integral 30 Foot Cable)	32 AVG	32 AVG	32 AVG	32 AVG	
Weight (grams)	0.5				Cable Not Included
Mounting	Adhesive				

Wiring color code: +EXC = Red, -EXC = Black, +OUT = Green, -OUT = White

The information in this sheet has been carefully reviewed and is believed to be accurate; however, no responsibility is assumed for inaccuracies. Furthermore, this information does not convey to the purchaser of such devices any license under the patent rights to the manufacturer. Measurement Specialties, Inc. reserves the right to make changes without further notice to any product herein. Measurement Specialties, Inc. makes no warranty, representation or guarantee regarding the suitability of its product for any particular purpose, nor does Measurement Specialties, Inc. assume any liability arising out of the application or use of any product or circuit and specifically disclaims any and all liability, including without limitation consequential or incidental damages. Typical parameters can and do vary in different applications. All operating parameters must be validated for each customer application by customer's technical experts. Measurement Specialties, Inc. does not convey any license under its patent rights nor the rights of others.

ordering info

PART NUMBERING Model Number+Range+Excitation+Cable Length+Options

```
52-GGGG-VV-CCC-XY
      |    |  |    |_____Options
      |    |  |_____Cable (360 is 360 inches)
      |    |_________Excitation (10 is 10 Vdc)
      |_____________Range (0100 is 100 g)
```

Example: 52-2000-10-360-XY

Model 52, Standard Configuration: 2000g, 10V Excitation, 360" (30ft.) Cable, No Options

32 Journey Ste. 150 Aliso Viejo, CA 92656 949-716-5377 enduser@meas-spec.com

Supporting your great ideas www.pewatron.com PEWATRON a member of the Angst + Pfister Group

PEWATRON
a member of the Angst + Pfister Group

We are here for you. Addresses and Contacts

Sales Switzerland

Postcode 3000 – 9999
Liechtenstein

Matthias Rüegg
Ruhbergstrasse 32
CH-9230 Flawil

Phone + 41 44 877 35 18
Mobile + 41 76 491 66 66
Fax + 41 44 877 35 19

matthias.rueegg@pewatron.com

Postcode 1000 – 2999

Raffael Favaretto
Route d'Oron 124
CH-1673 Promasens

Phone + 41 44 877 35 22
Mobile + 41 76 444 63 14
Fax + 41 44 877 35 23

raffael.favaretto@pewatron.com

Sales Germany

Postcode 60000 – 79999

Dieter Hirthe
Mühlweg 23
D-71554 Weissach i.T.

Phone + 49 719 149 60 58
Mobile + 49 163 762 74 30
Fax + 49 719 193 31 88

dieter.hirthe@pewatron.com

Postcode 10000 – 59999
Postcode 80000 – 99999

Kurt Stritzelberger
Neumarkter Str. 86a
D-81673 Munich

Phone + 49 89 260 38 47
Mobile + 49 171 803 41 35
Fax + 49 89 43 10 91 91

kurt.stritzelberger@pewatron.com

Key Accounts
Aerospace and Defence

Claus Wübbena
Vogelkamp 26
D-26655 Westerstede

Phone + 49 4488 5204 614
Mobile + 49 173 9700 691
Fax + 49 4488 5204 616

claus.wuebbena@pewatron.com

Sales Austria

Kurt Stritzelberger
Neumarkter Str. 86a
D-81673 Munich

Phone + 49 89 260 38 47
Mobile + 49 17 18 03 41 35
Fax + 49 89 43 10 91 91

kurt.stritzelberger@pewatron.com

Sales Other Countries / Product Management

Sensors

Physical Sensors
Data Acquisition

Peter Felder
Phone + 41 44 877 35 05
peter.felder@pewatron.com

Geometrical Sensors

Eric Letsch
Phone + 41 44 877 35 14
eric.letsch@pewatron.com

Power Supplies

DC-DC Converters
Switching Power Supplies
DC-AC Inverters

Sebastiano Leggio
Phone + 41 44 877 35 06
sebastiano.leggio@pewatron.com

E-Components

Current Sensors
Man Machine Interface
Measurement Probes

Sebastiano Leggio
Phone + 41 44 877 35 06
sebastiano.leggio@pewatron.com

PEWATRON AG
Thurgauerstrasse 66
CH-8052 Zurich

Phone + 41 44 877 35 00
Fax + 41 44 877 35 25

www.pewatron.com
info@pewatron.com