measurement SPECIALTIES

Model 63 Accelerometer

DC Response
Durable Cable
Small Package
Reliable Performance

The Model 63 accelerometer is a small, compact triaxial device designed for vehicle impact and road testing. Its mechanical overload stops provide high shock protection in rugged applications. Featuring ranges from 500 g to 2000 g and frequency response to 3000 Hz, this sensor is easily mounted in hard to reach places.

dimensions

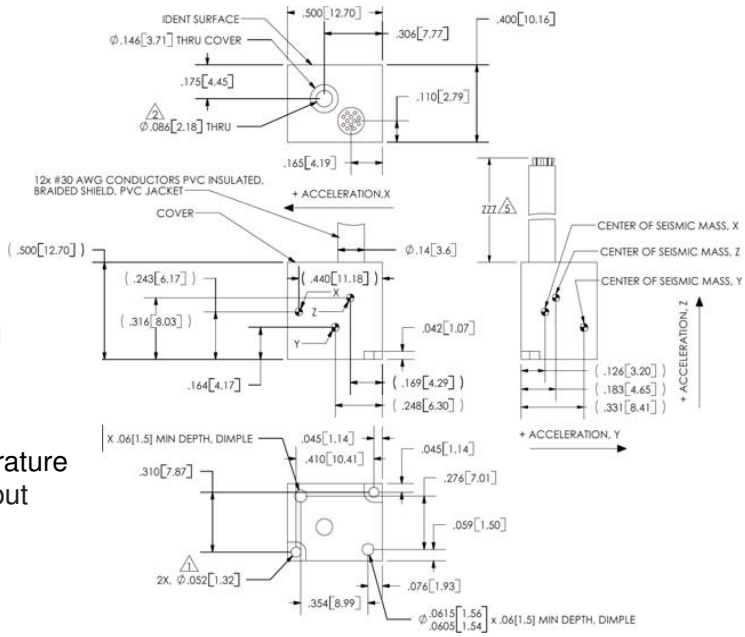

FEATURES

- 2nd Generation MEMS Sensing Element
- 2000 g Full Scale Range
- 2-10 VDC Excitation
- -20 to +85°C Operating Temperature
- <±50 mV Zero Measurand Output
- Mechanical Overload Stops
- Replaceable Sensors

APPLICATIONS

- Safety Crash Testing
  - Auto
  - Truck
  - Recreational Vehicles
- Shock Testing

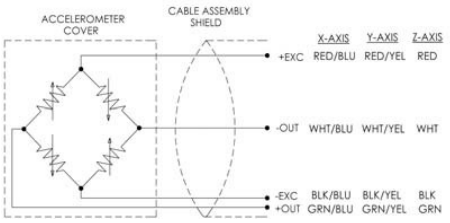

TABULATION 5	
ZZZ	TOLERANCE
≤ 12 [305]	+ 1 [25] - 0 [0]
> 12 [305] & ≤ 60 [1524]	+ 2 [51] - 0 [0]
> 60 [1524] & ≤ 120 [3048]	+ 4 [102] - 0 [0]
> 120 [3048] & ≤ 360 [9144]	+ 6 [152] - 0 [0]
> 360 [9144]	+ 12 [305] - 0 [0]

32 Journey Ste. 150 Aliso Viejo, CA 92656 949-716-5377 enduser@meas-spec.com

Supporting your great ideas www.pewatron.com PEWATRON a member of the Angst + Pfister Group

Model 63 Accelerometer

performance specifications

All values are typical at 24 ºC, 100 Hz and 10VDC excitation unless otherwise stated. Measurement Specialties, Inc. reserves the right to update and change these specifications without notice.

PARAMETERS					
DYNAMIC				Units	Notes
Range	500	1000	2000		
Sensitivity	0.9	0.15	0.15	mV/g	
Frequency Response (Z - Axis)	0-3000	0-3000	0-3000	Hz	±5%
Frequency Response (X & Y - Axis)	0-1500	0-1500	0-1500	Hz	±5%
Resonance	17,000	22,000	26,000	Hz	Gas Damped
Non-Linearity		±1		% FSO	
Transverse Sensitivity		<3		%	
Zero Acceleration Output		<±50		mV	
Thermal Zero Shift, 0 - 50ºC(32 - 122ºF)		±0.05 (±0.03)		%FSO/ºC (%FSO/ºF)	
Thermal Sensitivity Shift, 0 - 50ºC(32 - 122ºF)		±0.1 (±0.06)		%/ºC(%/ºF)	
ELECTRICAL					
Voltage Excitation		2 to 10		Vdc	
Input Impedance		3500 to 4800		S	
Output Impedance (Varies with current)		2700 to 4800		S	
Insulation Resistance		>100		MS	
Ground Isolation		Isolated			
Cable Output		12 x 30 AWG Conductors			72" Standard Length
PHYSICAL					
Case Material		Stainless Steel			
Weight		7		grams	Without Cable
Mounting		Screw			M2 X 0.4, 16 mm length
Mounting Torque		3(0.3)			Lb-in(Nm)
ENVIRONMENTAL					
Shock Limit	5000	7000	10000	g's	
Operating Temperature	-20 to +85 / -4 to +185				ºC/ºF
Humidly					Epoxy sealed
PART NUMBERING Model Number+Range+Cable Length					

The information in this sheet has been carefully reviewed and is believed to be accurate; however, no responsibility is assumed for inaccuracies. Furthermore, this information does not convey to the purchaser of such devices any license under the patent rights to the manufacturer. Measurement Specialties, Inc. reserves the right to make changes without further notice to any product herein. Measurement Specialties, Inc. makes no warranty, representation or guarantee regarding the suitability of its product for any particular purpose, nor does Measurement Specialties, Inc. assume any liability arising out of the application or use of any product or circuit and specifically disclaims any and all liability, including without limitation consequential or incidental damages. Typical parameters can and do vary in different applications. All operating parameters must be validated for each customer application by customer's technical experts. Measurement Specialties, Inc. does not convey any license under its patent rights nor the rights of others.

ordering info

63 - ZZZZ - ZZZ

- ZZZ: Cable Length (inches) [e.g. 072 is 72" inches, standard]
- ZZZZ: Range (g) [e.g. 0500 is 500g range]

Custom connector options are available. Contact Measurement Specialties, Inc. for applicable model number.

32 Journey Ste. 150 Aliso Viejo, CA 92656 949-716-5377 enduser@meas-spec.com

Supporting your great ideas www.pewatron.com PEWATRON a member of the Angst + Pfister Group

PEWATRON
a member of the Angst + Pfister Group

We are here for you. Addresses and Contacts

Sales Switzerland

Postcode 3000 – 9999
Liechtenstein

Matthias Rüegg
Ruhbergstrasse 32
CH-9230 Flawil

Phone + 41 44 877 35 18
Mobile + 41 76 491 66 66
Fax + 41 44 877 35 19

matthias.rueegg@pewatron.com

Postcode 1000 – 2999

Raffael Favaretto
Route d'Oron 124
CH-1673 Promasens

Phone + 41 44 877 35 22
Mobile + 41 76 444 63 14
Fax + 41 44 877 35 23

raffael.favaretto@pewatron.com

Sales Germany

Postcode 60000 – 79999

Dieter Hirthe
Mühlweg 23
D-71554 Weissach i.T.

Phone + 49 719 149 60 58
Mobile + 49 163 762 74 30
Fax + 49 719 193 31 88

dieter.hirthe@pewatron.com

Postcode 10000 – 59999
Postcode 80000 – 99999

Kurt Stritzelberger
Neumarkter Str. 86a
D-81673 Munich

Phone + 49 89 260 38 47
Mobile + 49 171 803 41 35
Fax + 49 89 43 10 91 91

kurt.stritzelberger@pewatron.com

Key Accounts
Aerospace and Defence

Claus Wübbena
Vogelkamp 26
D-26655 Westerstede

Phone + 49 4488 5204 614
Mobile + 49 173 9700 691
Fax + 49 4488 5204 616

claus.wuebbena@pewatron.com

Sales Austria

Kurt Stritzelberger
Neumarkter Str. 86a
D-81673 Munich

Phone + 49 89 260 38 47
Mobile + 49 17 18 03 41 35
Fax + 49 89 43 10 91 91

kurt.stritzelberger@pewatron.com

Sales Other Countries / Product Management

Sensors

Physical Sensors
Data Acquisition

Peter Felder
Phone + 41 44 877 35 05
peter.felder@pewatron.com

Geometrical Sensors

Eric Letsch
Phone + 41 44 877 35 14
eric.letsch@pewatron.com

Power Supplies

DC-DC Converters
Switching Power Supplies
DC-AC Inverters

Sebastiano Leggio
Phone + 41 44 877 35 06
sebastiano.leggio@pewatron.com

E-Components

Current Sensors
Man Machine Interface
Measurement Probes

Sebastiano Leggio
Phone + 41 44 877 35 06
sebastiano.leggio@pewatron.com

PEWATRON AG
Thurgauerstrasse 66
CH-8052 Zurich

Phone + 41 44 877 35 00
Fax + 41 44 877 35 25

www.pewatron.com
info@pewatron.com