measurement SPECIALTIES

Model 1201 Accelerometer

DC Response
Durable Cable
Reliable Performance
Low Cost

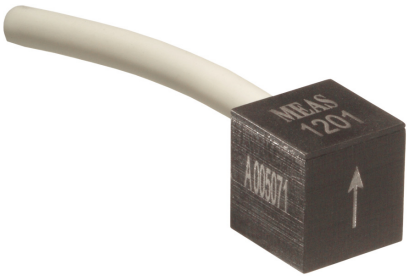

The Model 1201 Accelerometer

is a small, compact uniaxial device designed for vehicle impact and road testing. Its mechanical overload stops provide high shock protection in rugged applications. Featuring ranges from 50 g to 1000g and frequency response to 3000 Hz, this sensor is easily mounted in hard to get places on vehicles under test.

FEATURES

- 2nd GEN MEMS Sensing Element
- 1000 g Full Scale Range
- 2-10 VDC Excitation for Maximum Flexibility
- 0-50 °C Temperature Range
- ±40 mV Zero Measurand Output
- Gas Damping
- Connector Options
- Mechanical Overload Stops
- Designed for Screw Mounting

APPLICATIONS

- Crash Testing
- Impact Testing
- Off-Road Testing
- Road Testing

dimensions

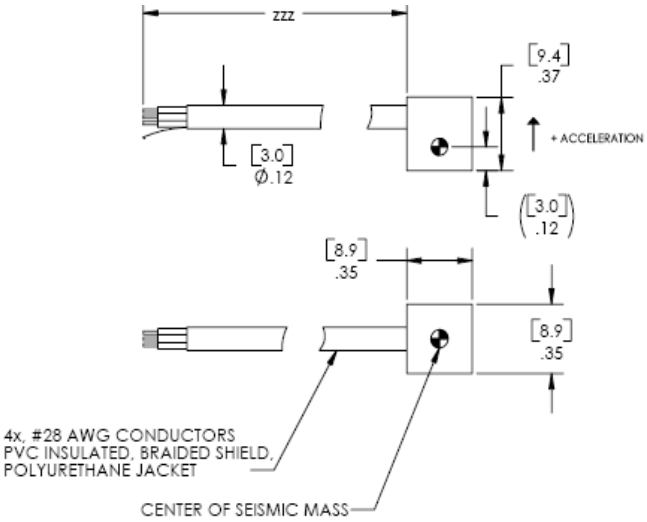

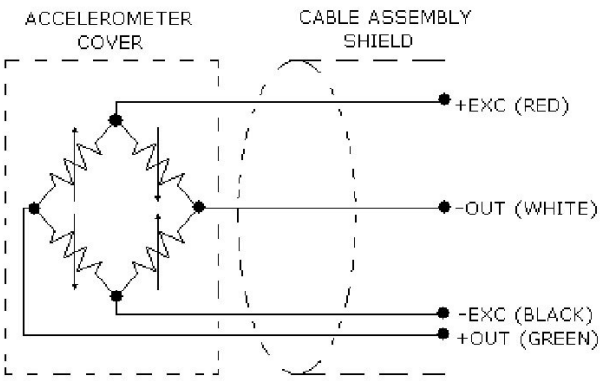

Supporting your great ideas
www.pewatron.com
PEWATRON
a member of the Angst + Pfister Group

Model 1201 Accelerometer

performance specifications

All values are typical at ±24℃, 100 Hz and 10 Vdc excitation unless otherwise stated. Measurement Specialties reserves the right to update and change these specifications without notice.

Parameters						
DYNAMIC						**Notes**
Range(g)	±50	±100	±200	±500	±1000	
Sensitivity (mV/g)	2	.9	.9	.4	.15	
Frequency Response (Hz)	0-800	0-1500	0-1800	0-2700	0-3000	± 1 dB
Resonant Frequency (Hz)	2000	3000	4000	6000	7000	
Non-Linearity (% of reading)	±1	±1	±1	±1	±1	
Transverse Sensitivity (%)	3 %	3 %	3 %	3 %	3 %	
Thermal Zero Shift (%FSO/℃)	±0.05	±0.05	±0.05	±0.05	±0.05	From 0 to +50℃
Thermal Sensitivity Shift (%/℃)	±0.2	±0.2	±0.2	±0.2	±0.2	From 0 to +50℃
ELECTRICAL						
Zero Acceleration Output (mV)	<±40	<±40	<±40	<±40	<±40	
Excitation (Vdc)	2 to 10	2 to 10	2 to 10	2 to 10	2 to 10	
Input Resistance	3500-4800	3500-4800	3500-4800	3500-4800	3500-4800	Measured between +EXC and –EXC
Output Resistance (Ω)	2700-4800	2700-4800	2700-4800	2700-4800	2700-4800	Measured between +OUT and -OUT
Insulation Resistance (MΩ)	>100	>100	>100	>100	>100	@50Vdc
Ground Isolation	Isolated from Mounting Surface					
Humidity	Epoxy Sealed					
ENVIRONMENTAL						
Shock Limit (g)	3000	3000	4000	5000	5000	
Operating Temperature (℃)	-20 to +85					
PHYSICAL						
Case Material	Anodized Aluminum					
Cable (Integral 30 Foot Cable)						4 x 28 AWG Conductors
Cable Jacket						Polyurethane
Weight (grams)	2.5	2.5	2.5	2.5	2.5	Cable Not Included
Mounting	Adhesive / Screw Mount					

The information in this sheet has been carefully reviewed and is believed to be accurate; however, no responsibility is assumed for inaccuracies. Furthermore, this information does not convey to the purchaser of such devices any license under the patent rights to the manufacturer. Measurement Specialties, Inc. reserves the right to make changes without further notice to any product herein. Measurement Specialties, Inc. makes no warranty, representation or guarantee regarding the suitability of its product for any particular purpose, nor does Measurement Specialties, Inc. assume any liability arising out of the application or use of any product or circuit and specifically disclaims any and all liability, including without limitation consequential or incidental damages. Typical parameters can and do vary in different applications. All operating parameters must be validated for each customer application by customer's technical experts. Measurement Specialties, Inc. does not convey any license under its patent rights nor the rights of others.

ordering info

PART NUMBERING Model Number+Range+Excitation+Cable Length+Options

```
1201-GGGG-VV-CCCX
          |    |  |  |_____Options
          |    |  |_____Cable (360 is 360 inches)
          |    |_________Excitation (10 is 10 Vdc)
          |______________Range (0100 is 100 g)
```

Options:
X = None
D = Deutsch Connector (P/N TBDJ)
L = Lemo Connector (P/N FGG.18.307.CYCD42)
T = Tajimi Connector (P/N R05PB5M)

Example: 1201-1000-10-360X
Standard Configuration: 1000g, 10V Excitiation, 360" (30ft) cable, No Options

Supporting your great ideas
www.pewatron.com
PEWATRON
a member of the Angst + Pfister Group

PEWATRON
a member of the Angst + Pfister Group

We are here for you. Addresses and Contacts

Sales Switzerland

Postcode 3000 – 9999
Liechtenstein

Matthias Rüegg
Ruhbergstrasse 32
CH-9230 Flawil

Phone + 41 44 877 35 18
Mobile + 41 76 491 66 66
Fax + 41 44 877 35 19

matthias.rueegg@pewatron.com

Postcode 1000 – 2999

Raffael Favaretto
Route d'Oron 124
CH-1673 Promasens

Phone + 41 44 877 35 22
Mobile + 41 76 444 63 14
Fax + 41 44 877 35 23

raffael.favaretto@pewatron.com

Sales Germany

Postcode 60000 – 79999

Dieter Hirthe
Mühlweg 23
D-71554 Weissach i.T.

Phone + 49 719 149 60 58
Mobile + 49 163 762 74 30
Fax + 49 719 193 31 88

dieter.hirthe@pewatron.com

Postcode 10000 – 59999
Postcode 80000 – 99999

Kurt Stritzelberger
Neumarkter Str. 86a
D-81673 Munich

Phone + 49 89 260 38 47
Mobile + 49 171 803 41 35
Fax + 49 89 43 10 91 91

kurt.stritzelberger@pewatron.com

Key Accounts
Aerospace and Defence

Claus Wübbena
Vogelkamp 26
D-26655 Westerstede

Phone + 49 4488 5204 614
Mobile + 49 173 9700 691
Fax + 49 4488 5204 616

claus.wuebbena@pewatron.com

Sales Austria

Kurt Stritzelberger
Neumarkter Str. 86a
D-81673 Munich

Phone + 49 89 260 38 47
Mobile + 49 17 18 03 41 35
Fax + 49 89 43 10 91 91

kurt.stritzelberger@pewatron.com

Sales Other Countries / Product Management

Sensors

Physical Sensors
Data Acquisition

Peter Felder
Phone + 41 44 877 35 05
peter.felder@pewatron.com

Geometrical Sensors

Eric Letsch
Phone + 41 44 877 35 14
eric.letsch@pewatron.com

Power Supplies

DC-DC Converters
Switching Power Supplies
DC-AC Inverters

Sebastiano Leggio
Phone + 41 44 877 35 06
sebastiano.leggio@pewatron.com

E-Components

Current Sensors
Man Machine Interface
Measurement Probes

Sebastiano Leggio
Phone + 41 44 877 35 06
sebastiano.leggio@pewatron.com

PEWATRON AG
Thurgauerstrasse 66
CH-8052 Zurich

Phone + 41 44 877 35 00
Fax + 41 44 877 35 25

www.pewatron.com
info@pewatron.com