measurement SPECIALTIES

Model EGCS-A2/B2 Accelerometer

Miniature Design
DC Response
10,000 g Over Range Stops
High Sensitivity

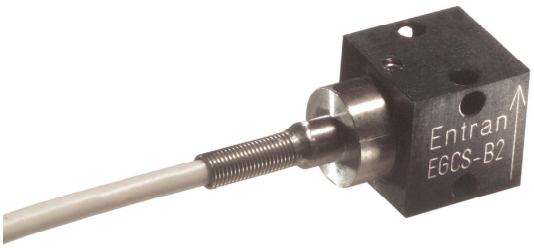

The Model EGCS accelerometers combine a damping ratio of 0.7 (Nominal) with built-in overrange stops that are set to protect the unit against 10,000g shocks. This is ideal for applications which may experience rough handling or in situations where the accelerometer must survive a high initial overload in order to make a low g measurement. These units feature a Wheatsone Bridge output with compensated temperature range of 20 to 80 ℃.

FEATURES

- Compact
- Heavy Duty
- Static and Dynamic Measurement
- Frequency Response through 4000 Hz
- ± 1% Non-Linearity
- -40℃ to +120℃ Operating Temperature Range
- 10,000 g Overrange Protection

APPLICATIONS

- Blast Testing
- Machine Control
- Downhole
- Engine Testing

dimensions

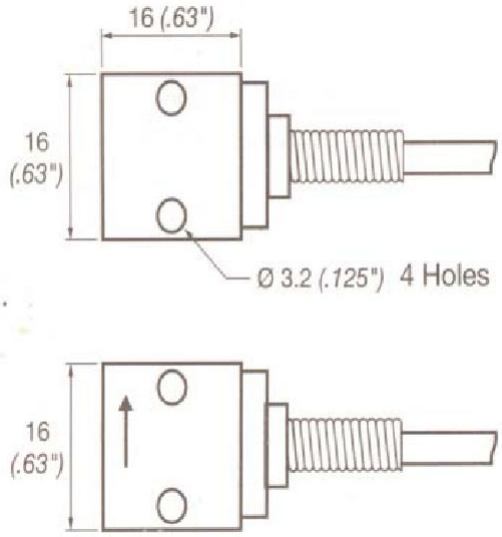

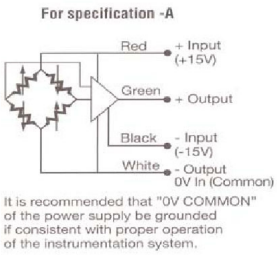

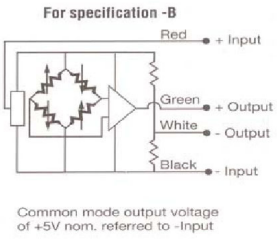

32 Journey Ste. 150 Aliso Viejo, CA 92656 949-716-5377 enduser@meas-spec.com

Supporting your great ideas www.pewatron.com PEWATRON a member of the Angst + Pfister Group

measurement SPECIALTIES

Model EGCS-A2/B2 Accelerometer

performance specifications

All values are typical at 24℃ and at ±15/28 Vdc excitation unless otherwise stated. Measurement Specialties, Inc. reserves the right to update and change these specifications without notice.

DYNAMIC

Range (±g)	5	10	25	50	100	250	500	1000	2500	5000
Sensitivity (mV/g) A2/B2	1000/500	500/250	200/100	100/50	50/25	20/10	10/5	5/2.5	2/1	1/0.5
Min. Freq. Response (Hz)	80	120	240	350	500	750	1000	1500	2000	2400
Nom. Resonance (Hz)	300	400	800	1200	1800	2600	3500	5000	7000	8000

Non-Linearity (%)	±1
Transverse Sensitivity (% MAX)	2
Zero Acceleration Output (mV)	±250
Thermal Zero Shift	±50mV/50℃ (100℉)
Thermal Sensitivity Shift	±2.5%/50℃ (100℉)
Damping Ratio (Nominal)	0.7

ELECTRICAL

Voltage Excitation (Vdc)	A2: ±15 B2: 28 (24/32)
Input Resistance (mA)	15 (typical)
Output Resistance (Ohms)	1K (typical)

PHYSICAL

Case Material	Stainless Steel
Cable Connections (meter)	1
Weight (DO/D1S)	10/12 grams
Mounting (DO/D1S)	Screw/Stud

ENVIRONMENTAL

Shock Limit Sensitive Axis (g)	±500	±1000	±2000	±5000	±10000
Operating Temperature (℃)	-40 to 120				
Compensated Temperature (℃)	20 to 80				

The information in this sheet has been carefully reviewed and is believed to be accurate; however, no responsibility is assumed for inaccuracies. Furthermore, this information does not convey to the purchaser of such devices any license under the patent rights to the manufacturer. Measurement Specialties, Inc. reserves the right to make changes without further notice to any product herein. Measurement Specialties, Inc. makes no warranty, representation or guarantee regarding the suitability of its product for any particular purpose, nor does Measurement Specialties, Inc. assume any liability arising out of the application or use of any product or circuit and specifically disclaims any and all liability, including without limitation consequential or incidental damages. Typical parameters can and do vary in different applications. All operating parameters must be validated for each customer application by customer's technical experts. Measurement Specialties, Inc. does not convey any license under its patent rights nor the rights of others.

ordering info

EGCS – A2 – 100 - /L2M/C

- EGCS: Model
- A2: Options Specifications
- 100: Range
- /L2M/C: Options C L00F or L00M
- Housing

COMPENSATED TEMPERATURE RANGES:	**STANDARD**	**= 20°C to 80°C (70°F to 170°F)**
	Z*	= Non-standard, contact factory
EXCITATION VOLTAGE:	**STANDARD**	**= (A2) +/-15VDC; (B2) 28 VDC**
	V*	= Non-standard Excitation with standard FSO and non-standard TSS, contact factory.
SPECIAL LEAD LENGTH:	L00F	= Replace "00" with total length in feet.
	L00M	= Replace "00" with total length in meters.
CONNECTOR WIRED TO CABLE:	C	= Microtech type male or equivalent

32 Journey Ste. 150 Aliso Viejo, CA 92656 949-716-5377 enduser@meas-spec.com

Supporting your great ideas www.pewatron.com PEWATRON a member of the Angst + Pfister Group

PEWATRON
a member of the Angst + Pfister Group

We are here for you. Addresses and Contacts

Sales Switzerland

Postcode 3000 – 9999
Liechtenstein

Matthias Rüegg
Ruhbergstrasse 32
CH-9230 Flawil

Phone + 41 44 877 35 18
Mobile + 41 76 491 66 66
Fax + 41 44 877 35 19

matthias.rueegg@pewatron.com

Postcode 1000 – 2999

Raffael Favaretto
Route d'Oron 124
CH-1673 Promasens

Phone + 41 44 877 35 22
Mobile + 41 76 444 63 14
Fax + 41 44 877 35 23

raffael.favaretto@pewatron.com

Sales Germany

Postcode 60000 – 79999

Dieter Hirthe
Mühlweg 23
D-71554 Weissach i.T.

Phone + 49 719 149 60 58
Mobile + 49 163 762 74 30
Fax + 49 719 193 31 88

dieter.hirthe@pewatron.com

Postcode 10000 – 59999
Postcode 80000 – 99999

Kurt Stritzelberger
Neumarkter Str. 86a
D-81673 Munich

Phone + 49 89 260 38 47
Mobile + 49 171 803 41 35
Fax + 49 89 43 10 91 91

kurt.stritzelberger@pewatron.com

Key Accounts
Aerospace and Defence

Claus Wübbena
Vogelkamp 26
D-26655 Westerstede

Phone + 49 4488 5204 614
Mobile + 49 173 9700 691
Fax + 49 4488 5204 616

claus.wuebbena@pewatron.com

Sales Austria

Kurt Stritzelberger
Neumarkter Str. 86a
D-81673 Munich

Phone + 49 89 260 38 47
Mobile + 49 17 18 03 41 35
Fax + 49 89 43 10 91 91

kurt.stritzelberger@pewatron.com

Sales Other Countries / Product Management

Sensors

Physical Sensors
Data Acquisition

Peter Felder
Phone + 41 44 877 35 05
peter.felder@pewatron.com

Geometrical Sensors

Eric Letsch
Phone + 41 44 877 35 14
eric.letsch@pewatron.com

Power Supplies

DC-DC Converters
Switching Power Supplies
DC-AC Inverters

Sebastiano Leggio
Phone + 41 44 877 35 06
sebastiano.leggio@pewatron.com

E-Components

Current Sensors
Man Machine Interface
Measurement Probes

Sebastiano Leggio
Phone + 41 44 877 35 06
sebastiano.leggio@pewatron.com

PEWATRON AG
Thurgauerstrasse 66
CH-8052 Zurich

Phone + 41 44 877 35 00
Fax + 41 44 877 35 25

www.pewatron.com
info@pewatron.com