Accelerometer ACH-01

Piezoelectric Accelerometer
Wide Bandwidth; AC Coupled
Ultra Low Power
High G Ranges

The ACH-01 is an inexpensive, general purpose accelerometer with outstanding performance characteristics. The use of piezoelectric polymer film in the ACH-01 provides many cost/performance advantages that allow it to be used in a wide range of applications where the use of traditional accelerometer technology is impractical. It is specifically designed for high volume applications which require the permanent installation of an accelerometer.

dimensions

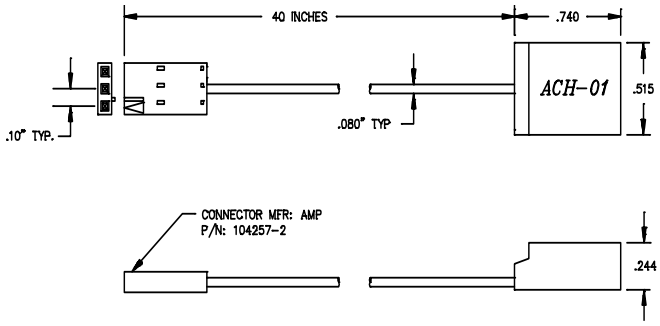

FEATURES

- Wide Frequency Response
- Excellent Phase Response
- Small Temperature Dependence
- Wide Supply Voltage Range
- Excellent Linearity
- Very High Resonant Frequency
- Wide Dynamic Range
- Low Transverse Sensitivity
- Wide Temperature Range
- Low Impedance Output
- Ultra Low Power

APPLICATIONS

- Machine Health Monitoring
- Model Analysis
- Automotive Sensors
- Appliances
- Feedback Control Systems

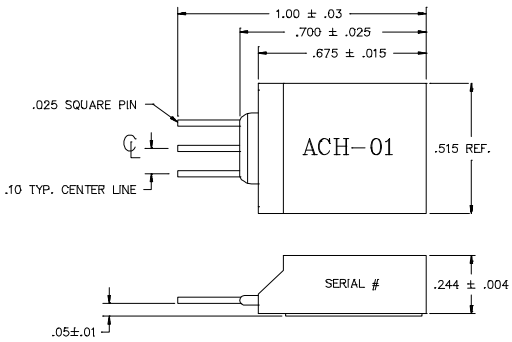

ACH-01-02 WITH PINS

Supporting your great ideas
www.pewatron.com
PEWATRON
a member of the Angst + Pfister Group

Accelerometer ACH-01

dimensions (con't)

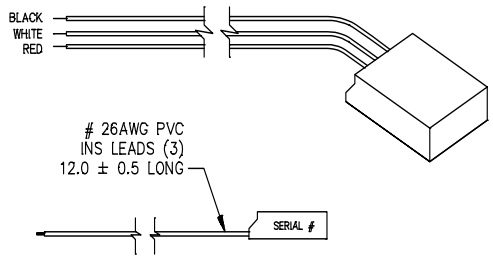

ACH-01-04 WITH WIRES

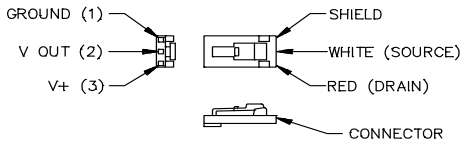

CONNECTOR DETAIL

performance specifications

PERFORMANCE (T=25°C)	Symbol	Min	Typ	Max	Units
Sensitivity	M_o	7	9	11	mV/g
Lower Frequency Limit (1)	f_l	--	2	5	Hz
Upper Frequency Limit(1)	f_u	10	20	--	kHz
Equivalent Noise Floor					
10Hz		--	130	--	$\mu g/\sqrt{Hz}$
100Hz		--	20	--	
1kHz		--	6	--	
Dynamic Range	--	±150	--	--	g
Linearity	--	--	0.1	1.0	%
Transverse Sensitivity	M_t	--	2.0	5	%
Resonant Frequency	f_o	--	35	--	kHz
Phase Deviation (±5° Limit)(6)	θ	10	--	10	kHz
Drain Voltage (6)	V+	3	--	40	Volts
Supply Current (6)	I_{dss}	30	--	90	µA
Output Impedance (6)	--	--	20	--	kΩ
ENVIRONMENTAL CHARACTERISTICS					
Operating Temperature (2)	T_o	-40	--	85	°C
Storage Temperature	T_s	-40	--	85	°C
Maximum Shock Level	A_m	1000	--	--	g
Base Strain Sensitivity (3)	--	--	0.3	--	g/με
Transient Temp Sensitivity (4)	--	--	0.35	--	g/°C
PHYSICAL CHARACTERISTICS					
Weight (5) Cable	W	--	8	--	grams

(1) ±3 dB limit (3) @ 250με in base plane (5) Includes 40" cable and connector
(2) ±2 dB from nominal M_o at 1kHz (4) @ 3Hz LLF (6) Typical Value

Supporting your great ideas www.pewatron.com PEWATRON a member of the Angst + Pfister Group

Accelerometer ACH-01

mounting requirements

Mounting methods play a critical role in determining the overall performance of any accelerometer. The ACH-01 is no exception. An improperly mounted accelerometer can give erroneous results. We recommend using an Adhesive Mounting Method.

The surface should be flat. The area where the ACH-01 is to be mounted should be thoroughly cleaned to remove any dirt or oil present on the surface. Use a quick setting, viscous methyl cyanoacrylate adhesive such as Loctite's Black Max™ or any epoxy such as Devcon's 5-Minute epoxy. Apply the adhesive sparingly to one surface following the manufacturer's directions. Apply pressure and allow the adhesive to set. Soft adhesives, such as double-sided tape or pressure sensitive adhesives, should not be used since they can adversely affect the ACH-01's performance. Cable should be adhered to the surface.

There is an interface amplifier available to simplify connection to the ACH-01, the IB-ACH-01. Please see the appropiate data sheet.

In an effort to keep the product cost low, the ACH-01 uses a ceramic substrate as the mounting base. Because of this, the ACH-01 is susceptible to base strain and temperature transient effects. A mechanically rigid and thermally non-conductive mounting surface is highly recommended to limit these effects. MEAS application engineers are available to recommend various mounting arrangements for your specific application.

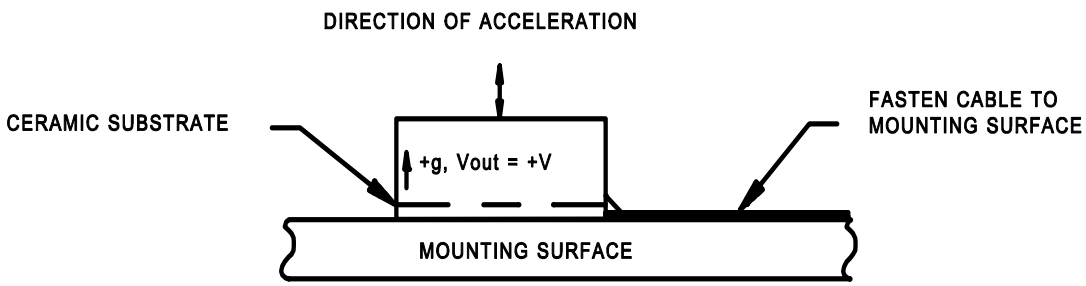

Supporting your great ideas
www.pewatron.com
PEWATRON
a member of the Angst + Pfister Group

Accelerometer ACH-01

electrical interface circuits

The accelerometer ACH-01 accommodates various electrical interface circuits. A typical example is provided in the following figure. The ACH-01 equivalent electrical schematic is also shown.

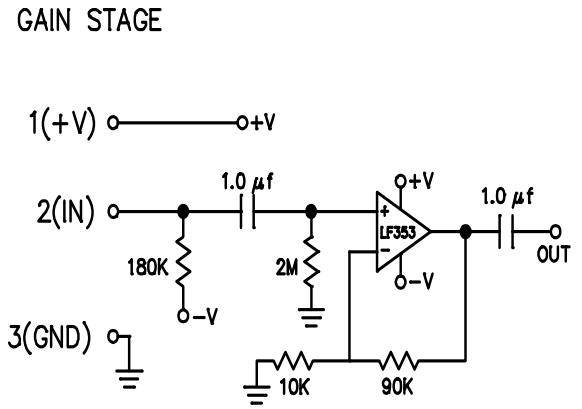

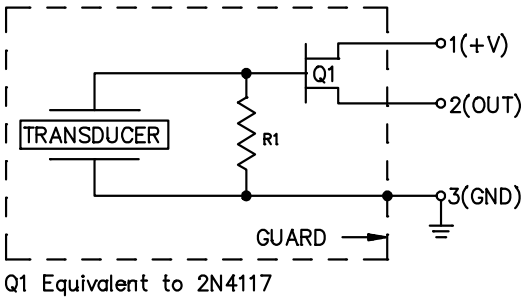

The information in this sheet has been carefully reviewed and is believed to be accurate; however, no responsibility is assumed for inaccuracies. Furthermore, this information does not convey to the purchaser of such devices any license under the patent rights to the manufacturer. Measurement Specialties, Inc. reserves the right to make changes without further notice to any product herein. Measurement Specialties, Inc. makes no warranty, representation or guarantee regarding the suitability of its product for any particular purpose, nor does Measurement Specialties, Inc. assume any liability arising out of the application or use of any product or circuit and specifically disclaims any and all liability, including without limitation consequential or incidental damages. Typical parameters can and do vary in different applications. All operating parameters must be validated for each customer application by customer's technical experts. Measurement Specialties, Inc. does not convey any license under its patent rights nor the rights of others.

ordering information

Description	Interface	Model No.	Part No.
Accelerometer	Pins	ACH-01-02	0-1000985-0
	Shielded Cable	ACH-01-03	1-1001220-0
	Discrete Wires	ACH-01-04	1-1001497-0
Amplifier	Amplifier Box	IB-ACH-01	1003058

North America

Measurement Specialties, Inc.
1000 Lucas Way
Hampton, VA 23666
Sales and Customer Service
Tel: +1-800-745-8008 or
+1-757-766-1500
Fax: +1-757-766-4297
Technical Support
Email: piezo@meas-spec.com

Europe

MEAS Deutschland GmbH
Hauert 13
44227 Dortmund
Germany
Sales and Customer Service
Tel: +49 (0)231 9740 21
Technical Support
Tel: +49 (0)6074 862822
Email: piezoeurope@meas-spec.com

Asia

Measurement Specialties (China), Ltd.
F1.6-4D, Tian An Development
Compound
ShenZhen, China 518048
Sales and Customer Service
Tel: +86 755 8330 1004
Technical Support
Email: piezo@meas-spec.com

Supporting your great ideas
www.pewatron.com
PEWATRON
a member of the Angst + Pfister Group

PEWATRON
a member of the Angst + Pfister Group

We are here for you. Addresses and Contacts

Sales Switzerland

Postcode 3000 – 9999
Liechtenstein

Matthias Rüegg
Ruhbergstrasse 32
CH-9230 Flawil

Phone + 41 44 877 35 18
Mobile + 41 76 491 66 66
Fax + 41 44 877 35 19

matthias.rueegg@pewatron.com

Postcode 1000 – 2999

Raffael Favaretto
Route d'Oron 124
CH-1673 Promasens

Phone + 41 44 877 35 22
Mobile + 41 76 444 63 14
Fax + 41 44 877 35 23

raffael.favaretto@pewatron.com

Sales Germany

Postcode 60000 – 79999

Dieter Hirthe
Mühlweg 23
D-71554 Weissach i.T.

Phone + 49 719 149 60 58
Mobile + 49 163 762 74 30
Fax + 49 719 193 31 88

dieter.hirthe@pewatron.com

Postcode 10000 – 59999
Postcode 80000 – 99999

Kurt Stritzelberger
Neumarkter Str. 86a
D-81673 Munich

Phone + 49 89 260 38 47
Mobile + 49 171 803 41 35
Fax + 49 89 43 10 91 91

kurt.stritzelberger@pewatron.com

Key Accounts
Aerospace and Defence

Claus Wübbena
Vogelkamp 26
D-26655 Westerstede

Phone + 49 4488 5204 614
Mobile + 49 173 9700 691
Fax + 49 4488 5204 616

claus.wuebbena@pewatron.com

Sales Austria

Kurt Stritzelberger
Neumarkter Str. 86a
D-81673 Munich

Phone + 49 89 260 38 47
Mobile + 49 17 18 03 41 35
Fax + 49 89 43 10 91 91

kurt.stritzelberger@pewatron.com

Sales Other Countries / Product Management

Sensors

Physical Sensors
Data Acquisition

Peter Felder
Phone + 41 44 877 35 05
peter.felder@pewatron.com

Geometrical Sensors

Eric Letsch
Phone + 41 44 877 35 14
eric.letsch@pewatron.com

Power Supplies

DC-DC Converters
Switching Power Supplies
DC-AC Inverters

Sebastiano Leggio
Phone + 41 44 877 35 06
sebastiano.leggio@pewatron.com

E-Components

Current Sensors
Man Machine Interface
Measurement Probes

Sebastiano Leggio
Phone + 41 44 877 35 06
sebastiano.leggio@pewatron.com

PEWATRON AG
Thurgauerstrasse 66
CH-8052 Zurich

Phone + 41 44 877 35 00
Fax + 41 44 877 35 25

www.pewatron.com
info@pewatron.com