measurement SPECIALTIES

Model EGPE-1C Accelerometer

Internally Shielded IEPE Accelerometer
Integral Welded Strain Relief
+150°C Operating Temperature
Hermetically Sealed

The Model EGPE-1C is a case isolated high temperature IEPE accelerometer with internal shielding. The accelerometer has a flat bandwidth up to 15kHz with a resonant frequency greater than 40kHz. The model EGPE-1C is available in ±50 to ±500g ranges and has an operating temperature range up to +150°C. The unit is hermetically sealed and features an integral strain relief with a Teflon jacketed cable.

FEATURES

- ±50g to ±500g Dynamic Range
- Wide bandwidth up to 15kHz
- Case Isolated, Internally Shielded
- Hermetically Sealed
- Annular Shear Mode
- Through Hole Mount
- Stable Temperature Response
- Integral Strain Relief

APPLICATIONS

- Health Usage Monitoring Systems
- Machinery Monitoring
- Gearbox Vibration Monitoring
- High Frequency Applications
- Harsh Environments

dimensions

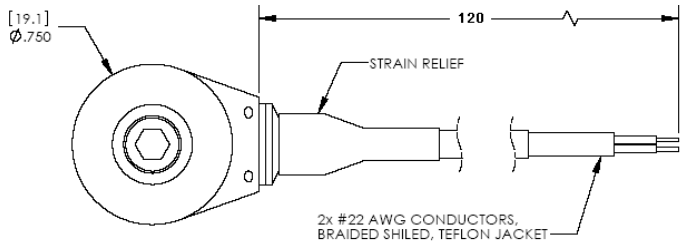

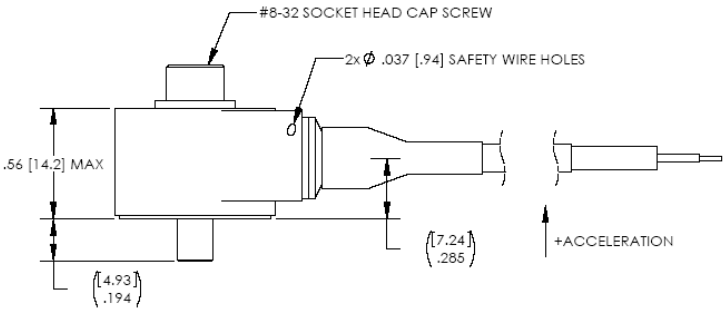

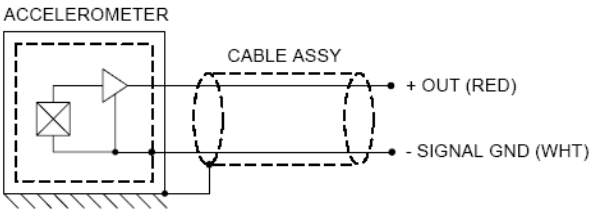

32 Journey Ste. 150 Aliso Viejo, CA 92656 949-716-5377 enduser@meas-spec.com

Supporting your great ideas www.pewatron.com PEWATRON a member of the Angst + Pfister Group

Model EGPE-1C Accelerometer

performance specifications

All values are typical at +24℃, 100Hz and 4mA excitation unless otherwise stated. Measurement Specialties reserves the right to update and change these specifications without notice.

Parameters			Notes
DYNAMIC			
Range (g)	±50	±500	
Sensitivity (mV/g)	100	10	
Frequency Response (Hz)	1-5000	1-10000	±5%
Frequency Response (Hz)	0.6-10000	0.6-15000	±1dB
Natural Frequency (Hz)	33000	43000	
Non-Linearity (%FSO)	±1	±1	
Transverse Sensitivity (%)	<5	<5	
Shock Limit (g)	5000	5000	
ELECTRICAL			
Compliance Voltage (Vdc)	18 to 30	18 to 30	
Excitation Current (mA)	2 to 20	2 to 20	
Bias Voltage (Vdc)	8 to 12	8 to 12	Room Temperature
Bias Voltage (Vdc)	6 to 14	6 to 14	-55 to +150℃
Output Impedance (Ω)	<100	<100	
Residual Noise (g RMS)	0.0001	0.00025	
Case Grounding	Case Isolated, Internally Shielded		
Ground Isolation	Isolated from Mounting Surface		
ENVIRONMENTAL			
Temperature Response (%)	±10	±10	
Operating Temperature (℃)	-55 to +150		
Storage Temperature (℃)	-55 to +150		
PHYSICAL			
Sensing Element	Ceramic (shear mode)		
Case Material	Stainless Steel		
Cable	Teflon Insulated Leads, Braided Shield, Teflon Jacket		
Weight (grams)	35		
Mounting	Through Hole (#8 or M4 cap screw)		
Mounting Torque	20 lb-in (2.3 N-m)		
AWG	#22		

Supplied accessories: 1x #8-32 Mounting Screw (3/4 inch length)

The information in this sheet has been carefully reviewed and is believed to be accurate; however, no responsibility is assumed for inaccuracies. Furthermore, this information does not convey to the purchaser of such devices any license under the patent rights to the manufacturer. Measurement Specialties, Inc. reserves the right to make changes without further notice to any product herein. Measurement Specialties, Inc. makes no warranty, representation or guarantee regarding the suitability of its product for any particular purpose, nor does Measurement Specialties, Inc. assume any liability arising out of the application or use of any product or circuit and specifically disclaims any and all liability, including without limitation consequential or incidental damages. Typical parameters can and do vary in different applications. All operating parameters must be validated for each customer application by customer's technical experts. Measurement Specialties, Inc. does not convey any license under its patent rights nor the rights of others.

ordering info

PART NUMBERING Model Number+Range

EGPE-1C-GGGG
|
|_____ Range (0500 is 500g)

Example: EGPE-1C-0500
Model EGPE-1C, 500g

32 Journey Ste. 150 Aliso Viejo, CA 92656 949-716-5377 enduser@meas-spec.com

Supporting your great ideas www.pewatron.com PEWATRON a member of the Angst + Pfister Group

PEWATRON
a member of the Angst + Pfister Group

We are here for you. Addresses and Contacts

Sales Switzerland

Postcode 3000 – 9999
Liechtenstein

Matthias Rüegg
Ruhbergstrasse 32
CH-9230 Flawil

Phone + 41 44 877 35 18
Mobile + 41 76 491 66 66
Fax + 41 44 877 35 19

matthias.rueegg@pewatron.com

Postcode 1000 – 2999

Raffael Favaretto
Route d'Oron 124
CH-1673 Promasens

Phone + 41 44 877 35 22
Mobile + 41 76 444 63 14
Fax + 41 44 877 35 23

raffael.favaretto@pewatron.com

Sales Germany

Postcode 60000 – 79999

Dieter Hirthe
Mühlweg 23
D-71554 Weissach i.T.

Phone + 49 719 149 60 58
Mobile + 49 163 762 74 30
Fax + 49 719 193 31 88

dieter.hirthe@pewatron.com

Postcode 10000 – 59999
Postcode 80000 – 99999

Kurt Stritzelberger
Neumarkter Str. 86a
D-81673 Munich

Phone + 49 89 260 38 47
Mobile + 49 171 803 41 35
Fax + 49 89 43 10 91 91

kurt.stritzelberger@pewatron.com

Key Accounts
Aerospace and Defence

Claus Wübbena
Vogelkamp 26
D-26655 Westerstede

Phone + 49 4488 5204 614
Mobile + 49 173 9700 691
Fax + 49 4488 5204 616

claus.wuebbena@pewatron.com

Sales Austria

Kurt Stritzelberger
Neumarkter Str. 86a
D-81673 Munich

Phone + 49 89 260 38 47
Mobile + 49 17 18 03 41 35
Fax + 49 89 43 10 91 91

kurt.stritzelberger@pewatron.com

Sales Other Countries / Product Management

Sensors

Physical Sensors
Data Acquisition

Peter Felder
Phone + 41 44 877 35 05
peter.felder@pewatron.com

Geometrical Sensors

Eric Letsch
Phone + 41 44 877 35 14
eric.letsch@pewatron.com

Power Supplies

DC-DC Converters
Switching Power Supplies
DC-AC Inverters

Sebastiano Leggio
Phone + 41 44 877 35 06
sebastiano.leggio@pewatron.com

E-Components

Current Sensors
Man Machine Interface
Measurement Probes

Sebastiano Leggio
Phone + 41 44 877 35 06
sebastiano.leggio@pewatron.com

PEWATRON AG
Thurgauerstrasse 66
CH-8052 Zurich

Phone + 41 44 877 35 00
Fax + 41 44 877 35 25

www.pewatron.com
info@pewatron.com