Model 832M1 Accelerometer

Triaxial Piezoelectric Accelerometer
<22µA Current Consumption
Wide Bandwidth to 6kHz
Circuit Board Mountable

The Model 832M1 is a low cost, board mountable triaxial accelerometer. Featuring stable piezo-ceramic crystals, the accelerometer incorporates full power and signal conditioning with a maximum current consumption of 22 micro-amps. The model 832M1 is available in ±25g to ±500g ranges and provides a flat frequency response up to greater than 6kHz. The standard model 832 offers the same envelope with a lower maximum current consumption of 4 micro-amps.

FEATURES

- ±25g to ±500g Dynamic Range
- Low Cost Triaxial
- Hermetically Sealed
- Piezo-ceramic Crystals
- -40° to +125°C Operating Range
- Single Axis Configurations Available

APPLICATIONS

- Asset Monitoring
- Data Loggers
- Impact Monitoring
- Machine Health Monitoring
- System Wake-Up Switch
- Embedded Applications

dimensions

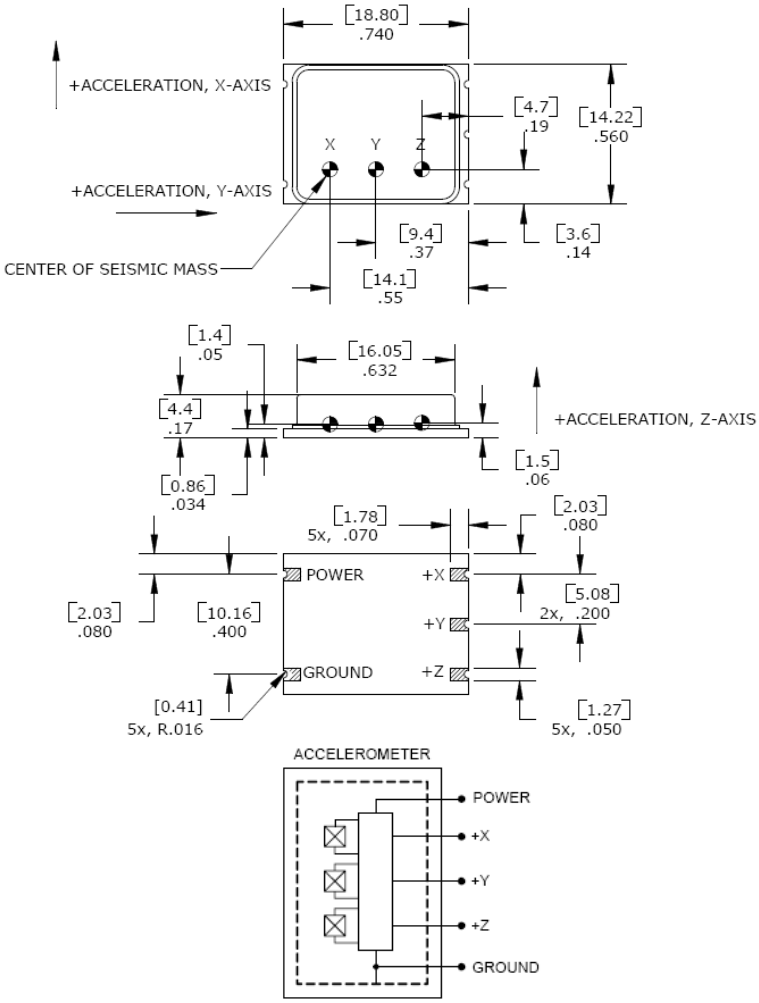

32 Journey Ste. 150 Aliso Viejo, CA 92656 949-716-5377 t&m@meas-spec.com

Supporting your great ideas www.pewatron.com PEWATRON a member of the Angst + Pfister Group

Model 832M1 Accelerometer

performance specifications

All values are typical at +24°C, 100Hz and 3.3Vdc excitation unless otherwise stated. Measurement Specialties reserves the right to update and change these specifications without notice. Standard product parameters are described in PSC-1001 for Embedded AC Accelerometers.

Parameters						Notes
DYNAMIC						
Range (g)	±25	±50	±100	±200	±500	
Sensitivity (mV/g)	50.0	25.0	12.5	6.25	2.5	±30%
Frequency Response (Hz) [1]	2-6000	2-6000	2-6000	2-6000	2-6000	±2dB
Natural Frequency (Hz)	>10000	>10000	>10000	>10000	>10000	
Non-Linearity (%FSO)	±2	±2	±2	±2	±2	
Transverse Sensitivity (%)	<5	<5	<5	<5	<5	
Shock Limit (g)	5000	5000	5000	5000	5000	
ELECTRICAL						
Bias Voltage (Vdc)	Exc Voltage / 2	Exc Voltage / 2	Exc Voltage / 2	Exc Voltage / 2	Exc Voltage / 2	
Total Supply Current (μA)	<22	<22	<22	<22	<22	
Excitation Voltage (Vdc) [3]	3.3 to 5.5	3.3 to 5.5	3.3 to 5.5	3.3 to 5.5	3.3 to 5.5	
Output Impedance (Ω)	<100	<100	<100	<100	<100	
Insulation Resistance (MΩ)	>100	>100	>100	>100	>100	@100Vdc
Residual Noise (μg/√Hz)	100	200	100	200	400	2Hz to 10kHz
Shielding	100%					
Ground Isolation	Isolated from Mounting Surface					
ENVIRONMENTAL						
Temperature Response (%)	±10					
Operating Temperature (°C)	-40 to +125					
Storage Temperature (°C)	-40 to +125					
PHYSICAL						
Sensing Element	Ceramic (shear mode)					
Case Material	Ceramic Base, Nickel Silver Cover					
Weight (grams)	3.0					

[1] A lower current consumption of 4 micro-amps is available on model 832.
[2] The model 832M1 is not to be reflow soldered at high temperature, manual soldering is recommended. See application note.
[3] The model 832M1 can be operated with 2.8V excitation but the full-scale range will be limited.

Calibration supplied: CS-SENS-0100 NIST Traceable Amplitude Calibration at 100Hz

Wiring color code: See schematic

The information in this sheet has been carefully reviewed and is believed to be accurate; however, no responsibility is assumed for inaccuracies. Furthermore, this information does not convey to the purchaser of such devices any license under the patent rights to the manufacturer. Measurement Specialties, Inc. reserves the right to make changes without further notice to any product herein. Measurement Specialties, Inc. makes no warranty, representation or guarantee regarding the suitability of its product for any particular purpose, nor does Measurement Specialties, Inc. assume any liability arising out of the application or use of any product or circuit and specifically disclaims any and all liability, including without limitation consequential or incidental damages. Typical parameters can and do vary in different applications. All operating parameters must be validated for each customer application by customer's technical experts. Measurement Specialties, Inc. does not convey any license under its patent rights nor the rights of others.

ordering info

PART NUMBERING Model Number+Range

832M1-GGGG
I
I_____ Range (0200 is 200g)

Example: 832M1-0200
Model 832M1, 200g

32 Journey Ste. 150 Aliso Viejo, CA 92656 949-716-5377 t&m@meas-spec.com

Supporting your great ideas www.pewatron.com PEWATRON a member of the Angst + Pfister Group

PEWATRON
a member of the Angst + Pfister Group

We are here for you. Addresses and Contacts

Sales Switzerland

Postcode 3000 – 9999
Liechtenstein

Matthias Rüegg
Ruhbergstrasse 32
CH-9230 Flawil

Phone + 41 44 877 35 18
Mobile + 41 76 491 66 66
Fax + 41 44 877 35 19

matthias.rueegg@pewatron.com

Postcode 1000 – 2999

Raffael Favaretto
Route d'Oron 124
CH-1673 Promasens

Phone + 41 44 877 35 22
Mobile + 41 76 444 63 14
Fax + 41 44 877 35 23

raffael.favaretto@pewatron.com

Sales Germany

Postcode 60000 – 79999

Dieter Hirthe
Mühlweg 23
D-71554 Weissach i.T.

Phone + 49 719 149 60 58
Mobile + 49 163 762 74 30
Fax + 49 719 193 31 88

dieter.hirthe@pewatron.com

Postcode 10000 – 59999
Postcode 80000 – 99999

Kurt Stritzelberger
Neumarkter Str. 86a
D-81673 Munich

Phone + 49 89 260 38 47
Mobile + 49 171 803 41 35
Fax + 49 89 43 10 91 91

kurt.stritzelberger@pewatron.com

Key Accounts
Aerospace and Defence

Claus Wübbena
Vogelkamp 26
D-26655 Westerstede

Phone + 49 4488 5204 614
Mobile + 49 173 9700 691
Fax + 49 4488 5204 616

claus.wuebbena@pewatron.com

Sales Austria

Kurt Stritzelberger
Neumarkter Str. 86a
D-81673 Munich

Phone + 49 89 260 38 47
Mobile + 49 17 18 03 41 35
Fax + 49 89 43 10 91 91

kurt.stritzelberger@pewatron.com

Sales Other Countries / Product Management

Sensors

Physical Sensors
Data Acquisition

Peter Felder
Phone + 41 44 877 35 05
peter.felder@pewatron.com

Geometrical Sensors

Eric Letsch
Phone + 41 44 877 35 14
eric.letsch@pewatron.com

Power Supplies

DC-DC Converters
Switching Power Supplies
DC-AC Inverters

Sebastiano Leggio
Phone + 41 44 877 35 06
sebastiano.leggio@pewatron.com

E-Components

Current Sensors
Man Machine Interface
Measurement Probes

Sebastiano Leggio
Phone + 41 44 877 35 06
sebastiano.leggio@pewatron.com

PEWATRON AG
Thurgauerstrasse 66
CH-8052 Zurich

Phone + 41 44 877 35 00
Fax + 41 44 877 35 25

www.pewatron.com
info@pewatron.com