Model 7132A Accelerometer

Triaxial IEPE Accelerometer
Miniature Cube
Hermetically Sealed, Titanium
±50g to ±2000g Dynamic Ranges

The Model 7132A is a miniature triaxial IEPE accelerometer available in ±50g to ±2000g dynamic ranges. The accelerometer features a hermetically sealed titanium construction with a 4-pin Microtech connector interface. The model 7132A incorporates stable piezo-ceramic crystals in annular shear mode which provide a flat frequency response up to >12kHz.

FEATURES

- 4-pin Connector Interface
- Wide bandwidth up to 12kHz
- Adhesive Mounting
- Miniature Triaxial
- Annular Shear Mode Crystals
- Stable Temperature Response

APPLICATIONS

- Vibration & Shock Monitoring
- Laboratory Testing
- Modal Applications
- High Frequency Applications
- General Purpose Usage
- Stress Screening

dimensions

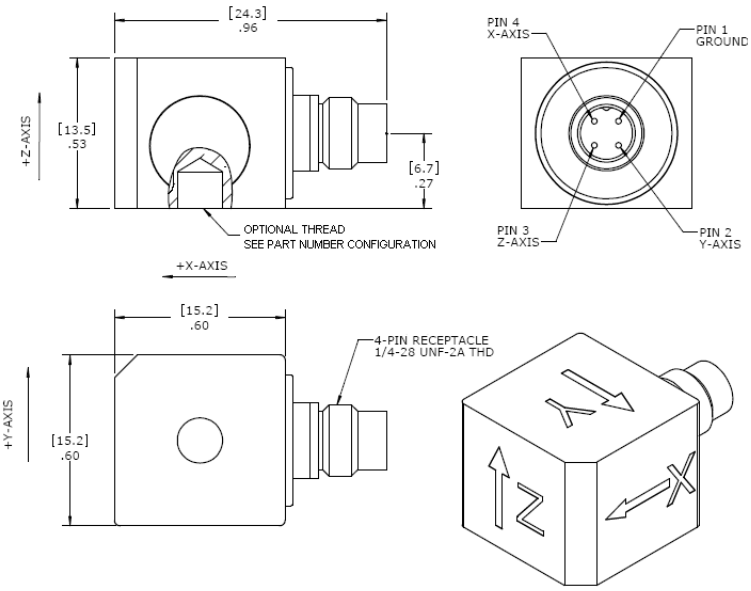

SCHEMATIC (EACH CHANNEL)

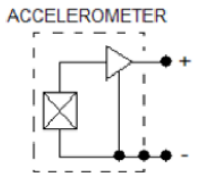

32 Journey Ste. 150 Aliso Viejo, CA 92656 949-716-5377 enduser@meas-spec.com

Supporting your great ideas www.pewatron.com PEWATRON a member of the Angst + Pfister Group

Model 7132A Accelerometer

performance specifications

All values are typical at +24°C, 100Hz and 4mA excitation unless otherwise stated. Measurement Specialties reserves the right to update and change these specifications without notice. Standard product parameters are described in PSC-1003 for Plug & Play AC Accelerometers.

Parameters					
DYNAMIC					**Notes**
Range (g)	±50	±100	±500	±2000	
Sensitivity (mV/g)	100	50	10	2.5	±10%
Frequency Response (Hz)	1-7000	1-7000	1-8000	1-10000	±10%
Frequency Response (Hz)	0.4-9000	0.4-9000	0.4-10000	0.4-12000	±2dB
Natural Frequency (Hz)	37000	37000	37000	42000	
Non-Linearity (%FSO)	±1	±1	±1	±1	
Transverse Sensitivity (%)	<5	<5	<5	<5	
Shock Limit (g)	5000	5000	5000	5000	
ELECTRICAL					
Compliance Voltage (Vdc)	18 to 30	18 to 30	18 to 30	18 to 30	
Excitation Current (mA)	2 to 10	2 to 10	2 to 10	2 to 10	
Bias Voltage (Vdc)	8 to 12	8 to 12	8 to 12	8 to 12	Room Temperature
Bias Voltage (Vdc)	6 to 13	6 to 13	6 to 13	6 to 13	-55 to +125°C
Output Impedance (Ω)	<100	<100	<100	<100	
Full Scale Output Voltage (V)	±5	±5	±5	±5	
Residual Noise (g RMS)	0.0005	0.0006	0.001	0.0025	Broadband 1Hz to 10kHz
Discharge Time Constant (sec)	0.8 to 1.2				
Ground Isolation	Case Grounded				
ENVIRONMENTAL					
Temperature Response (%)	See Typical Temperature Response Curve				
Operating Temperature (°C)	-55 to +125				
Storage Temperature (°C)	-55 to +125				
Humidity	Hermetically Sealed				
PHYSICAL					
Sensing Element	Ceramic (shear mode)				
Case Material	Titanium				
Electrical Connector	4-Pin Receptacle				
Weight (grams)	14				
Mounting	Adhesive				

Calibration supplied:	CS-FREQ-0100	NIST Traceable Amplitude Calibration from 20Hz to ±2dB Frequency Response Limit
Optional accessories:	315-XXX	Cable Assembly, 4-pin ¼-28 to 3x BNC (XXX designates length in inches, 10ft standard)
	161	Three Channel PE & IEPE Signal Conditioner

The information in this sheet has been carefully reviewed and is believed to be accurate; however, no responsibility is assumed for inaccuracies. Furthermore, this information does not convey to the purchaser of such devices any license under the patent rights to the manufacturer. Measurement Specialties, Inc. reserves the right to make changes without further notice to any product herein. Measurement Specialties, Inc. makes no warranty, representation or guarantee regarding the suitability of its product for any particular purpose, nor does Measurement Specialties, Inc. assume any liability arising out of the application or use of any product or circuit and specifically disclaims any and all liability, including without limitation consequential or incidental damages. Typical parameters can and do vary in different applications. All operating parameters must be validated for each customer application by customer's technical experts. Measurement Specialties, Inc. does not convey any license under its patent rights nor the rights of others.

32 Journey Ste. 150 Aliso Viejo, CA 92656 949-716-5377 enduser@meas-spec.com

Supporting your great ideas www.pewatron.com PEWATRON a member of the Angst + Pfister Group

Model 7132A Accelerometer

performance specifications

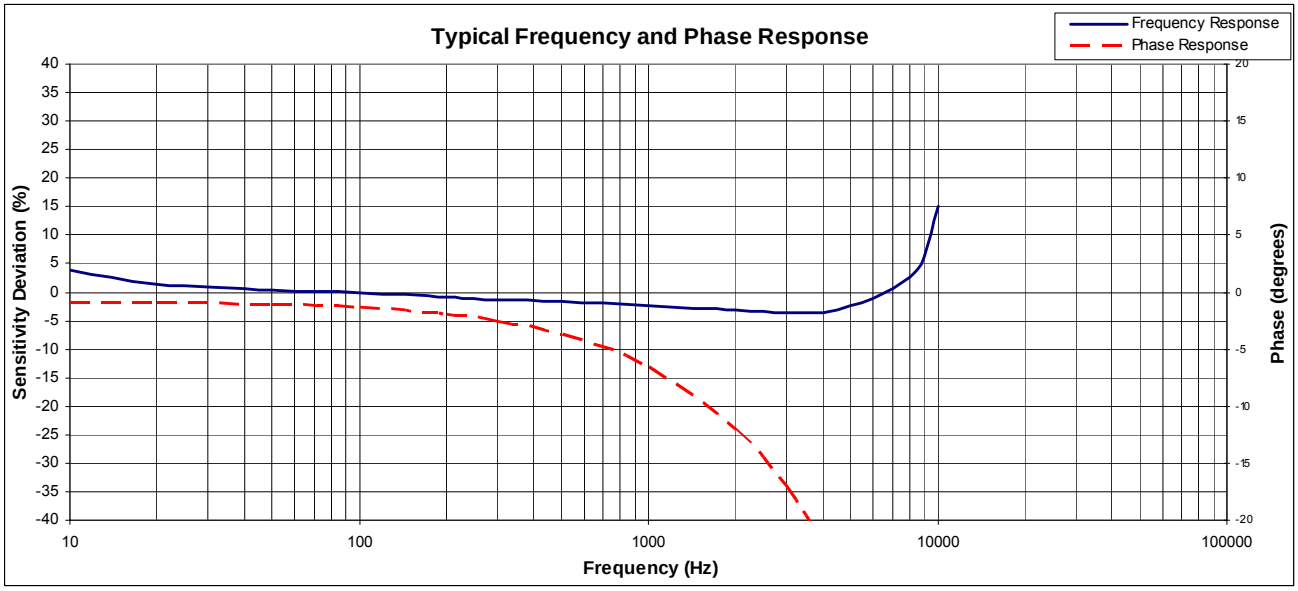

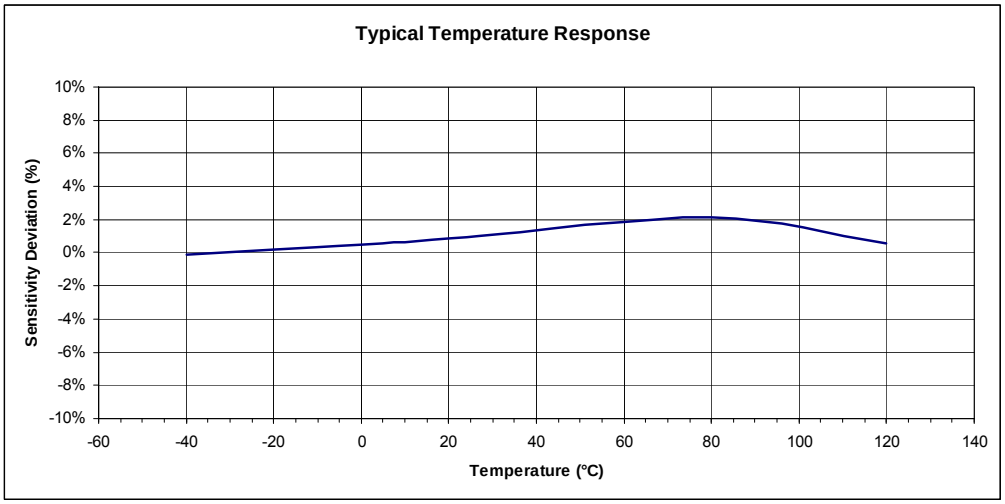

ordering info

PART NUMBERING Model Number+Range

7132AT-GGGG-XX
I I I_____ Optional Thread Dash Number
I I_____ Range (0050 is 50g)
I_____ TEDS compliant to IEEE 1451.4 when 'T' option is included

Dash Number	Thread Options
-01	#5-40 UNC-2B
-02	#10-32 UNF-2B
-03	M3 x 0.5 6g

Example: 7132A-0050
Model 7132A, 50g, No Option

32 Journey Ste. 150 Aliso Viejo, CA 92656 949-716-5377 enduser@meas-spec.com

Supporting your great ideas www.pewatron.com
PEWATRON a member of the Angst + Pfister Group

PEWATRON
a member of the Angst + Pfister Group

We are here for you. Addresses and Contacts

Sales Switzerland

Postcode 3000 – 9999
Liechtenstein

Matthias Rüegg
Ruhbergstrasse 32
CH-9230 Flawil

Phone + 41 44 877 35 18
Mobile + 41 76 491 66 66
Fax + 41 44 877 35 19

matthias.rueegg@pewatron.com

Postcode 1000 – 2999

Raffael Favaretto
Route d'Oron 124
CH-1673 Promasens

Phone + 41 44 877 35 22
Mobile + 41 76 444 63 14
Fax + 41 44 877 35 23

raffael.favaretto@pewatron.com

Sales Germany

Postcode 60000 – 79999

Dieter Hirthe
Mühlweg 23
D-71554 Weissach i.T.

Phone + 49 719 149 60 58
Mobile + 49 163 762 74 30
Fax + 49 719 193 31 88

dieter.hirthe@pewatron.com

Postcode 10000 – 59999
Postcode 80000 – 99999

Kurt Stritzelberger
Neumarkter Str. 86a
D-81673 Munich

Phone + 49 89 260 38 47
Mobile + 49 171 803 41 35
Fax + 49 89 43 10 91 91

kurt.stritzelberger@pewatron.com

Key Accounts
Aerospace and Defence

Claus Wübbena
Vogelkamp 26
D-26655 Westerstede

Phone + 49 4488 5204 614
Mobile + 49 173 9700 691
Fax + 49 4488 5204 616

claus.wuebbena@pewatron.com

Sales Austria

Kurt Stritzelberger
Neumarkter Str. 86a
D-81673 Munich

Phone + 49 89 260 38 47
Mobile + 49 17 18 03 41 35
Fax + 49 89 43 10 91 91

kurt.stritzelberger@pewatron.com

Sales Other Countries / Product Management

Sensors

Physical Sensors
Data Acquisition

Peter Felder
Phone + 41 44 877 35 05
peter.felder@pewatron.com

Geometrical Sensors

Eric Letsch
Phone + 41 44 877 35 14
eric.letsch@pewatron.com

Power Supplies

DC-DC Converters
Switching Power Supplies
DC-AC Inverters

Sebastiano Leggio
Phone + 41 44 877 35 06
sebastiano.leggio@pewatron.com

E-Components

Current Sensors
Man Machine Interface
Measurement Probes

Sebastiano Leggio
Phone + 41 44 877 35 06
sebastiano.leggio@pewatron.com

PEWATRON AG
Thurgauerstrasse 66
CH-8052 Zurich

Phone + 41 44 877 35 00
Fax + 41 44 877 35 25

www.pewatron.com
info@pewatron.com