Operating Manual

Model 832 Accelerometer

Measurement Specialties, Inc.
Vibration Sensors Design Center
32 Journey, Suite 150
Aliso Viejo, CA 92656 USA
Tel: 949-716-7324

www.meas-spec.com
vibration@meas-spec.com

Supporting your great ideas www.pewatron.com PEWATRON a member of the Angst + Pfister Group

Warranty
Measurement Specialties, Inc. accelerometers are warranted during a period of one year from date of shipment to original purchaser to be free from defects in material and workmanship. The liability of Seller under this warranty is limited to replacing or repairing any instrument or component thereof which is returned by Buyer, at his expense, during such period and which has not been subjected to misuse, neglect, improper installation, repair, alteration, or accident. Seller shall have the right to final determination as to the existence and cause of a defect. In no event shall Seller be liable for collateral or consequential damages. This warrant is in lieu of any other warranty, expressed, implied, or statutory; and no agreement extending or modifying it will be binding upon Seller unless in writing and signed by a duly authorized officer.

Receiving Inspection
Every Measurement Specialties, Inc. accelerometer is carefully inspected and is in perfect working condition at the time of shipment. Each accelerometer should be checked as soon as it is received. If the unit is damaged in any way, or fails to operate, a claim should immediately be filed with the transportation company.

Service Concerns
If a Measurement Specialties, Inc. instrument requires service, first contact the nearest Measurement Specialties, Inc. representative. They may be able to solve the problem without returning the unit to the factory. If it is determined that factory service is required, call Customer Service at the regional headquarters for an RMA number before return.

Returns
All units being returned to the factory require an RMA (Return Material Authorization) number before they will be accepted. This number may be obtained by calling Customer Service at the regional headquarters with the following information; model number(s), quantity, serial number(s), and symptoms of the problem, if being returned for service. You must include the original purchase order number if under warranty.

Recalibration Services
The Vibration Sensors Design Center and its two manufacturing facilities in China and France offer factory re-calibration services for Piezoresistive, Piezoelectric and Integrated Electronics Piezoelectric (IEPE, ISOTRON, ICP, etc.) accelerometers. NIST (US), DKD (Germany), COFRAC (France) traceable calibration services on sensitivity at 100 Hz (102 or 120 Hz in Europe) and full frequency sweeps are offered. Contact the regional headquarters for pricing information.

Inquiries
Address all inquiries on operation or applications to your nearest Sales Representative, or to the Vibration Applications Support as follows:

Global Headquarters
1000 Lucas Way
Hampton, VA 23666, USA
Tel: +1 757 766 1500

Vibration Sensors Design Center
32 Journey, Suite 150
Aliso Viejo, CA 92656, USA
Tel: +1 949 716 7324

European Headquarters
105 av. du Général Eisenhower
BP 1036, 31023 Toulouse Cedex, France
Tel: +33 (0) 561 194 543

Asian Headquarters
Measurement Specialties (China) Ltd.
No. 26 Langshan Road
Shenzhen High-Tech Park (North)
Nanshan District, Shenzhen 518107, China
Tel: +86 755 33305088

Email: vibration@meas-spec.com
Web: www.meas-spec.com/vibration

Supporting your great ideas www.pewatron.com PEWATRON a member of the Angst + Pfister Group

Description

The Model 832 is a low power triaxial accelerometer designed to be mounted on circuit boards. The accelerometer is ideal for embedded applications and is packaged is a hermetic ceramic LCC package. The Model 832 features stable piezo-ceramic crystals with full power and signal conditioning that draws a maximum current of 4 micro-Amps. The accelerometer is offered in ranges from ±100g to ±500g with a flat response up to greater than 2000Hz.

Installation

The model 832 accelerometer is designed to be soldered to printed circuit boards or hybrid substrates. It is critical that the substrate has a low coefficient of expansion and that you have good mechanical coupling between the sensor and the mounting surface to ensure good transmissibility. Ceramic circuit boards are recommended but FR4 boards can also be used with a recommended thickness of 0.062” (1.57mm). The model 832 accelerometer is not to be reflow soldered in an oven since the reflow temperatures may shift the output sensitivity. It is recommended to reflow solder on a hot plate or manually solder the accelerometer to the circuit boards. The following guidelines should be followed.

- The recommended dimensions for the mounting pads on the circuit board are detailed below.
- Pre-tinning of the accelerometer pads is recommended to prevent gold embrittlement.
- Use a suitable RMA flux coated solder paste.
- A recommended stencil thickness is .008” (0.2mm).
- If using a hot plate, do not heat above +250°C and leave only on plate long enough for solder to reflow.

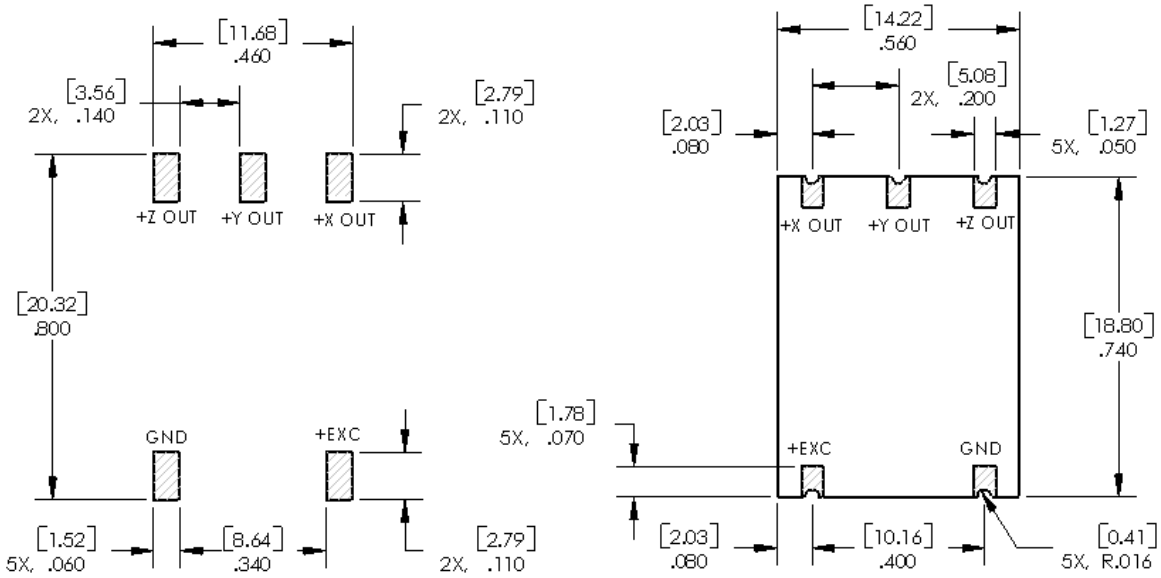

CIRCUIT BOARD PADS

MODEL 832 ACCELEROMETER

Supporting your great ideas www.pewatron.com PEWATRON a member of the Angst + Pfister Group

If the accelerometer is to be subjected to high amplitude shocks during operation then it is also recommended to apply a thin layer of epoxy underneath the accelerometer after solder attachment. A low viscosity cyanoacrylate with a room temperature cure such as Loctite 4501 is recommended.

Excitation

Although the model 832 is designed to be operated by 3.3Vdc battery power for optimum performance, the accelerometer can also be powered by excitation voltages (ExcV) ranging from 2.7 to 5.5Vdc. However, excitation voltages other than 3.3Vdc will affect the full scale range of the accelerometer since the bias voltage is a function of excitation voltage.

The following formula can be used to calculate the full scale range of the accelerometer when using different excitation voltages other than 3.3Vdc.

Full scale range (g) = [ExcV – 0.3V - (ExcV / 2)] / Sensitivity (V/g)

Example; a model 832-0200 with z-axis sensitivity of 6.41mV/g and 2.8Vdc excitation

Full scale range = [2.8V – 0.3V - (2.8V / 2)] / .00641V/g = 172g

Temperature Compensation

The model 832 accelerometer incorporates piezo-ceramic crystals in shear mode that have a stable temperature performance of the operating range of the accelerometer. Additional temperature compensation can be accomplished by using an external ASIC with onboard temperature sensing to further correct temperature induced errors.

Supporting your great ideas www.pewatron.com PEWATRON a member of the Angst + Pfister Group

Residual Noise

The PSD noise plots for the various ranges of the model 832 accelerometer are illustrated below. The spikes in the plots are 60Hz input and harmonics.

Model 832-0100

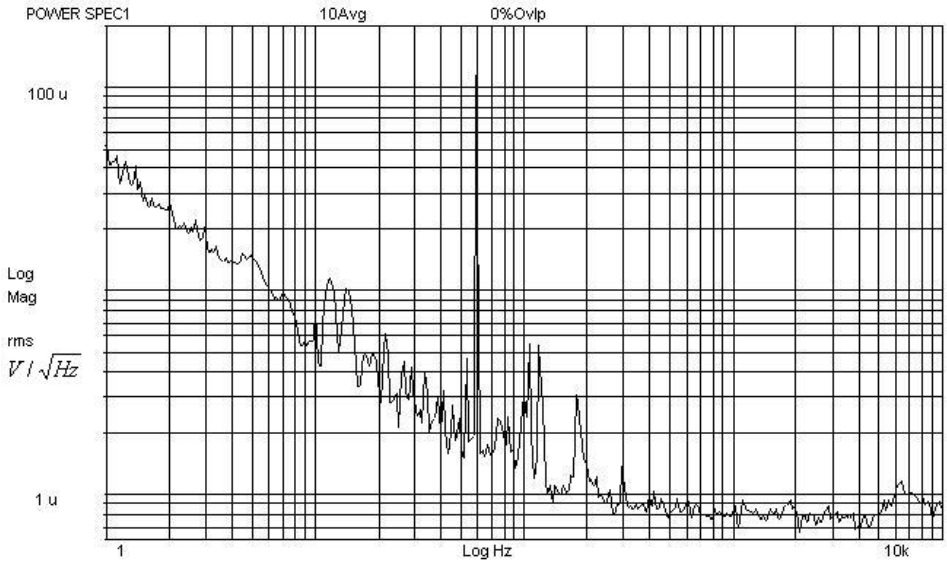

Model 832-0200

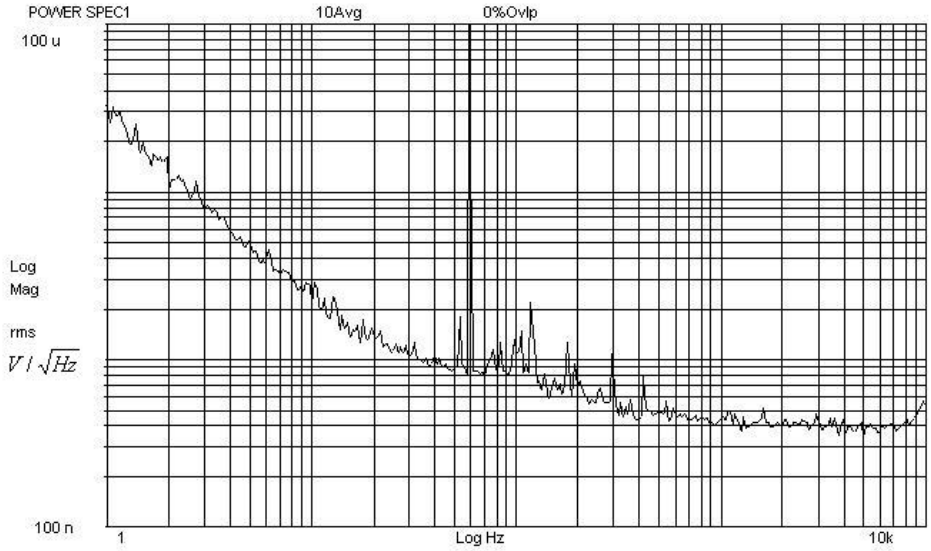

Supporting your great ideas www.pewatron.com PEWATRON a member of the Angst + Pfister Group

Model 832-0500

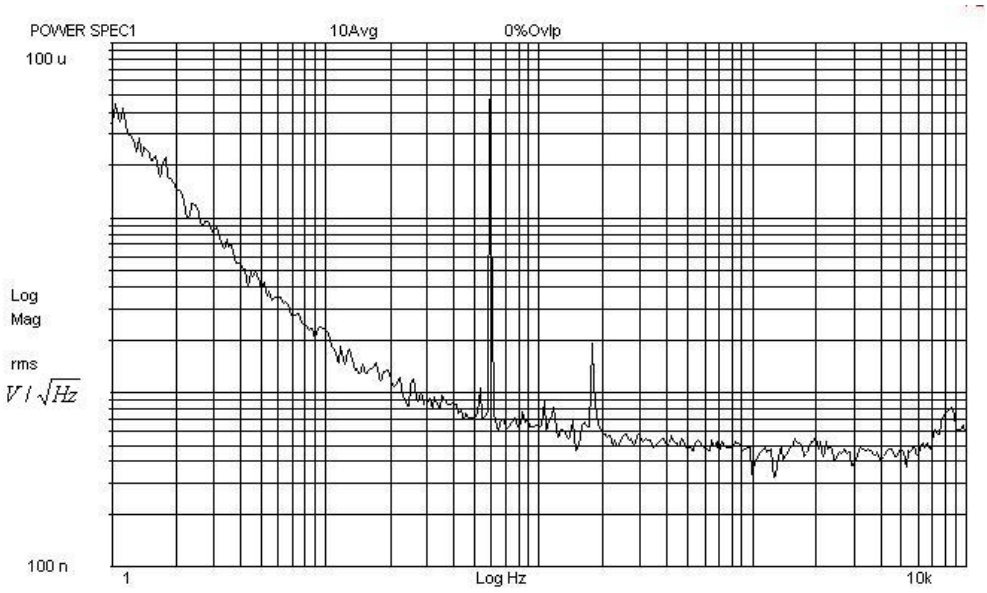

Supporting your great ideas www.pewatron.com PEWATRON a member of the Angst + Pfister Group

measurement SPECIALTIES

Frequently Asked Questions

Question: The datasheet shows the operating temperature from -40°C to +125°C. -40°C is not low enough; we need beyond -55°C. What is your plan of meeting this requirement?

Response: We tested the bias at -55C. Test result of 832-0500 DC bias change with temperature is shown below, DC Bias changes about 0.5% at -55ºC compared to 25ºC:

	25ºC	-55ºC
X	1.7423 V	1.7535 V
Y	1.7412 V	1.7477 V
Z	1.7928 V	1.8035 V

Total current supply is 4.1uA at -55ºC which is still within specification. Model 832M1 has no problem working down at -55ºC

Question: Do you happen to have any more detail for the assembling of this part to a board? Our board assembly department is a little concerned about manually soldering this part. It says on your data sheet that the accelerometer can't go through solder reflow at high temperature and that manual soldering is recommended. I was hoping for some more clarification on this statement.

Response: The reason for the caution is the potential risk of sensitivity shift in the output after reflow soldering. The units will survive the reflow soldering process. We caution against this process since we have seen a 1-2% sensitivity drop after reflow soldering. For our reflow profile we have a peak temperature of +250°C since we use non-leaded solder for RoHS compliance. A lower reflow profile may result in negligible sensitivity shift. If you can use leaded solder such Sn63 or Sn62 (183°C and 179°C eutectic respectively) then the peak reflow temp should not have to exceed +210°C (60sec max). This should then allow reflow soldering.

Question: We generally conformal coat our circuit boards to protect the circuitry, would there be any concern with conformal coating?

Response: No concerns with conformal coating. The seismic mass system and electronics are all hermetically sealed under the cover.

Question: Can we bake the board after coating?

Response: Yes. There will be no problem with an over-night bake at +200°F on the model 832M1. We bake the units for 24hours at +250°F during manufacture.

Question: Just a clarification, at 0g output, is the accelerometer output Supply Voltage/2? So that when we have a negative acceleration we approach 0 but not negative?

Response: Yes, you are correct. The output will swing nominally +/-1.25V about the bias voltage. For a +/-100g range accelerometer with 3.3V excitation (bias at 1.65V), the output would be nominally be 0.4V to 2.9V

Supporting your great ideas www.pewatron.com PEWATRON a member of the Angst + Pfister Group

Frequently Asked Questions (Continued)

Question: You mentioned about getting us an equation to calculate the measurement range based on our bias voltage. We talked about how the lower bias voltage would lower the maximum measurement of this accelerometer and I was hoping to get a better understanding of this.

Response: Page 5 in this manual, under the 'Excitation' paragraph, discusses how to calculate the full-scale range of the accelerometer based on excitation voltages other than the nominal 3.3V. Let us know if you need further information. Our engineers have confirmed that the minimum excitation voltage is in fact 2.7V. We specified 3.3V in our datasheet to give us some margin. We also confirmed that we had previously performed a signal warm-up test on our model 832M1. The signal converged to 98% of its final value at 30msec. There was no overshoot. It was typical of a single-pole response characteristic that was determined by its filtering …95% (lapse of three time constants).

Question: Can Measurement Specialties provide a higher temp version of Model 834M1?

Response: Yes, we can make high temp version which operates from -40°C to +150°C, but the current consumption will be 60uA.

Question: If I use structural epoxy around the perimeter to reinforce the vibration sensor onto the circuit card (after soldering) will this affect the vibration response of the sensor? Is there a reinforcement technique you would recommend?

Response: No, this will not affect the response of the sensor and in fact it is recommended to reinforce the sensor attachment after soldering. Typically we recommend the customer use a low viscosity cyanoacrylate adhesive and allow the epoxy to wick underneath the circuit board.

Question: What mounting techniques and materials are recommended to achieve the best high frequency response?

Response: To achieve the best frequency response, we recommend mounting the accelerometer directly to the structure to be measured. An adhesive can be used to secure the accelerometer. Take precautions not to short the output pads underneath the circuit board. Good frequency response can also be achieved by mounting the accelerometer onto a ceramic or hybrid circuit board. FR4 boards should be avoided for applications requiring wide bandwidth measurements since the FR4 material can impart a resonance to your measuring system. If attaching wires to the output pads then these need to be properly secured/anchored at regular intervals to minimize cable motion that can add noise and resonances to the output signal.

Question: What is the material composition of the plating on the solder pads?
Response: The circuit board traces are Titanium-Tungsten plated with Nickel and Gold. 50micro-inches min of Au (99.9% pure gold per MIL-G-45204, Type III, grade A) over 50-350micro-inches of Ni (per AMS-QQ-N-290, Class I).

Supporting your great ideas www.pewatron.com PEWATRON a member of the Angst + Pfister Group

measurement SPECIALTIES

Model 832 Specifications:

SPECIFICATIONS:

All values are typical at +24ºC (+75ºF), 3.3Vdc and 100Hz unless otherwise stated. Calibration data, traceable to National Institute of Standards and Technology (NIST), is supplied.

PARAMETERS	VALUE					UNITS
DASH NO.	-0025	-0050	-0100	-0200	-0500	
DYNAMIC RANGE	±25	±50	±100	±200	±500	g
SENSITIVITY (NOMINAL)	50	25	12.5	6.25	2.5	mV/g
FREQUENCY RESPONSE ±2dB	2-2000	2-2000	2-2000	2-2000	2-2000	Hz
RESONANT FREQUENCY	>10	>10	>10	>10	>10	kHz
RESIDUAL NOISE (2Hz to 10kHz)	12.5	25	100	200	400	µg/√Hz
TRANSVERSE SENSITIVITY	<10	<10	<10	<10	<10	%
TEMPERATURE RESPONSE	±10	±10	±10	±10	±10	%
LINEARITY	±1	±1	±1	±1	±1	%FSO
SHOCK LIMIT	±5000	±5000	±5000	±5000	±5000	g pk

PARAMETERS	VALUE	UNITS
BIAS VOLTAGE	Supply voltage/2	Vdc
OUPUT IMPEDANCE	<100	Ω
INSULATION RESISTANCE (@100Vdc)	>50	MΩ
SHIELDING	100	%
SUPPLY (COMPLIANCE) VOLTAGE	3.3 to 5.5	Vdc
TOTAL SUPPLY CURRENT	4	µA
WARM-UP TIME	30	msec
OPERATING TEMPERATURE	-20 to +80 (-4 to +176)	ºC (ºF)
HUMIDITY	Hermetically Sealed	
MATERIAL (Cover)	Nickel Silver	
MATERIAL (Base)	Ceramic	
SENSING ELEMENT	Piezo Ceramic	
WEIGHT	3.6	Grams

REVISIONS

REV	DESCRIPTION	DRAWN/DATE	CHECK./DATE	APPR./DATE
A	INITIAL RELEASE PER ECO30304	BR/02-18-08	HX/02-18-08	AC/02-18-08
B	REVISED PER ECO30359	BR/09-26-08	TC/09-26-08	HX/09-26-08
C	SPECIFICATION CHANGED, PADS CHANGED.	AR/10-27-08	IZ/10-27-08	HX/10-27-08
D	RESIDUAL NOISE & TRANSVERSE SENSITIVITY CHANGED.	AR/4-28-09	IZ/4-28-09	HX/4-28-09
E	ADD THE CENTER OF SEIAMIC MASS.	PT/6-26-09	IZ/6-26-09	BR/6-26-09
F	ADD 25g AND 50g	PT/2-1-10	IZ/2-1-10	HX/2-1-10

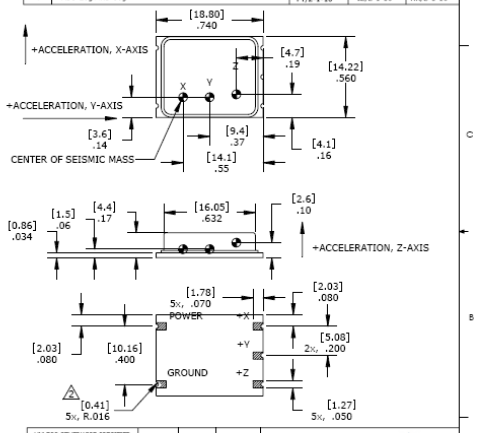

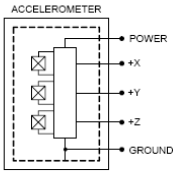

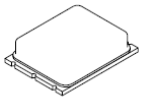

NOTES:

1. ACCELEROMETER CASE ISOLATED FROM MOUNTING SURFACE.
2. GOLD PLATED PADS (x5) AND CASTELLATIONS (x5).
3. MODEL NUMBER:
   832-ZZZZ
   RANGE (g) [e.g. 0200 IS 200g RANGE]

UNLESS OTHERWISE SPECIFIED:		NAME	DATE
DIMENSIONS ARE IN INCHES [mm]	DRAWN	B.RYDEN	02-18-08
TOLERANCES:	CHECKED	H.XU	02-18-08
ANGULAR ±5° TWO PLACE DECIMAL ±.03 [.8] THREE PLACE DECIMAL ±.010 [.25]	ENG APPR.	A.CHU	02-18-08
MATERIAL -	MFG APPR.	—	—
FINISH -	Q.A. APPR.	—	—

PROPRIETARY AND CONFIDENTIAL
THE INFORMATION CONTAINED IN THIS DRAWING IS THE SOLE PROPERTY OF MEASUREMENT SPECIALTIES, INC. ANY REPRODUCTION IN PART OR AS A WHOLE WITHOUT THE WRITTEN PERMISSION OF MEASUREMENT SPECIALTIES,INC. IS PROHIBITED.

COMMENTS:
DO NOT SCALE DRAWING.
INTERPRET GEOMETRIC TOLERANCING PER ANSI Y14.5M - 1994.

measurement SPECIALTIES
Aliso Viejo, CA 92656

TITLE:
MODEL 832
ACCELEROMETER

SIZE	DWG. NO.	REV
B	OD-832	F
SCALE:	WEIGHT:	SHEET 1 OF 1

Supporting your great ideas www.pewatron.com PEWATRON a member of the Angst + Pfister Group

PEWATRON
a member of the Angst + Pfister Group

We are here for you. Addresses and Contacts

Sales Switzerland

Postcode 3000 – 9999
Liechtenstein

Matthias Rüegg
Ruhbergstrasse 32
CH-9230 Flawil

Phone + 41 44 877 35 18
Mobile + 41 76 491 66 66
Fax + 41 44 877 35 19

matthias.rueegg@pewatron.com

Postcode 1000 – 2999

Raffael Favaretto
Route d'Oron 124
CH-1673 Promasens

Phone + 41 44 877 35 22
Mobile + 41 76 444 63 14
Fax + 41 44 877 35 23

raffael.favaretto@pewatron.com

Sales Germany

Postcode 60000 – 79999

Dieter Hirthe
Mühlweg 23
D-71554 Weissach i.T.

Phone + 49 719 149 60 58
Mobile + 49 163 762 74 30
Fax + 49 719 193 31 88

dieter.hirthe@pewatron.com

Postcode 10000 – 59999
Postcode 80000 – 99999

Kurt Stritzelberger
Neumarkter Str. 86a
D-81673 Munich

Phone + 49 89 260 38 47
Mobile + 49 171 803 41 35
Fax + 49 89 43 10 91 91

kurt.stritzelberger@pewatron.com

Key Accounts
Aerospace and Defence

Claus Wübbena
Vogelkamp 26
D-26655 Westerstede

Phone + 49 4488 5204 614
Mobile + 49 173 9700 691
Fax + 49 4488 5204 616

claus.wuebbena@pewatron.com

Sales Austria

Kurt Stritzelberger
Neumarkter Str. 86a
D-81673 Munich

Phone + 49 89 260 38 47
Mobile + 49 17 18 03 41 35
Fax + 49 89 43 10 91 91

kurt.stritzelberger@pewatron.com

Sales Other Countries / Product Management

Sensors

Physical Sensors
Data Acquisition

Peter Felder
Phone + 41 44 877 35 05
peter.felder@pewatron.com

Geometrical Sensors

Eric Letsch
Phone + 41 44 877 35 14
eric.letsch@pewatron.com

Power Supplies

DC-DC Converters
Switching Power Supplies
DC-AC Inverters

Sebastiano Leggio
Phone + 41 44 877 35 06
sebastiano.leggio@pewatron.com

E-Components

Current Sensors
Man Machine Interface
Measurement Probes

Sebastiano Leggio
Phone + 41 44 877 35 06
sebastiano.leggio@pewatron.com

PEWATRON AG
Thurgauerstrasse 66
CH-8052 Zurich

Phone + 41 44 877 35 00
Fax + 41 44 877 35 25

www.pewatron.com
info@pewatron.com