COLIBRYS
SMART SENSING SOLUTIONS

DATASHEET

MS9000.D / Single axis analog accelerometer

30S.MS9XXX.I.05.11

Energy
Mil/Aerospace
Industrial

Inertial
Tilt
Vibration
Seismic

Features

- ±1g to ±200g range
- Excellent bias stability (less than 0.05% of full scale)
- Single power supply (+2.5V to +5.5V, ratiometric voltage output)
- Low power
- Extra small 20 pin LCC ceramic package with hermetic sealing (8.9mm x 8.9mm)
- Individually calibrated (bias, scale factor and non linearity)
- Brown out protected
- RoHS compliant suitable for lead free soldering process and SMD mounting

The MS9000 product is a single axis MEMS capacitive accelerometer based on a bulk micro-machined silicon element specifically designed for high stability, a low power ASIC for signal conditioning, a micro-controller for storage of compensation values and a temperature sensor. The product is low power, fully calibrated, robust and extremely stable and the electronic configuration provides a solid power on reset and ensures a full protection against brown-out.

It operates from a single power supply voltage (between +2.5V and +5.5V) with low current consumption (< 0.5mA at 5V). The output is a ratiometric analog voltage that varies between +0.5V and +4.5V for the full-scale acceleration range at a voltage supply of +5V. The sensor is fully self-contained and packaged in a 20-pin LCC ceramic housing, thus insuring a full hermeticity.

Accelerometer specifications

All values are specified at +20°C (+68°F) and 5.0 VDC supply voltage, unless otherwise stated

	Units	MS9001	MS9002	MS9005	MS9010	MS9030	MS9050	MS9100	MS9200
Full scale range	g	± 1g	± 2g	± 5g	± 10g	± 30g	± 50g	± 100g	± 200g
Bias calibration	mg	< 5	< 10	< 25	< 50	< 150	< 250	< 500	< 1000
One year bias stability @ 6000g [1]	mg typ. (max.)	0.75 (< 2.5)	1.5 (< 5)	3.75 (< 12.5)	7.5 (< 25)	22 (< 75)	37.5 (< 125)	75 (< 250)	150 (< 500)
One year bias stability @ 1000g [2]	mg typ. (max.)	0.15 (< 0.75)	0.3 (< 1.5)	0.75 (< 3.75)	1.5 (< 7.5)	4.5 (< 22.5)	7.5 (< 37.5)	15 (< 75)	30 (< 150)
Switch on/off repeatability	mg max.	< 0.1	< 0.15	< 0.375	< 0.75	< 1.5	< 3.8	< 7.5	< 15
Bias temp. coefficient [2]	mg/°C typ.	< 0.05	< 0.1	< 0.25	< 0.5	< 1.5	< 2.5	< 5	< 10
	mg/°C max.	± 0.2	± 0.4	± 1	± 2	± 6	± 10	± 20	± 40
Scale factor sensitivity (K1)	mV/g	2000 ± 8	1000 ± 8	400 ± 4	200 ± 2	66.6 ± 1	40 ± 1	20 ± 1	10 ± 1
One year scale factor stability [1] & [2]	ppm typ. (max.)	300 (< 1000)	300 (< 1000)	300 (< 1000)	300 (< 1000)	300 (< 1000)	300 (< 1000)	300 (< 1000)	300 (< 1000)
Scale factor temp. coefficient [3]	ppm / °C typ.	100	100	100	100	100	100	100	100
	min. / max.	-50 / 250	-50 / 250	-50 / 250	-50 / 250	-50 / 250	-50 / 250	-50 / 250	-50 / 250
Input axis misalignment (Kp, Ko)	mrad max.	< 10	< 10	< 10	< 10	< 10	< 10	< 10	< 10
	% max	1	1	1	1	1	1	1	1
Resolution / Threshold (@ 1Hz)	mg max.	< 0.05	< 0.1	< 0.25	< 0.6	< 1.7	< 2.8	< 5.5	< 11
Non linearity	% of FS max.	< 0.7	< 0.8	< 0.8	< 0.9	< 0.9	< 0.9	< 1	< 1 [5]
	g max.	< 0.01	< 0.02	< 0.04	< 0.09	< 0.27	< 0.50	< 1	< 2 [5]
Bandwidth [4]	Hz	0 to ≥ 100	0 to ≥ 100	0 to ≥ 100	0 to ≥ 100	0 to ≥ 100	0 to ≥ 100	0 to ≥ 100	0 to ≥ 100
Noise spectral density in band	µV/√Hz typ.	18	18	18	18	18	18	18	18
(0 ; 9kHz)	max.	24	24	24	24	24	24	24	24
Resonant frequency	kHz		1.4	2.9	3.7	6.3	11	15	26

[1] One year stability defined according to IEEE 528-2001: turn on / on, storage at -55°C and 85°C, -40°C to 125°C T cycling, -55°C to 85°C unpowered harass, vibration, shock (6000g, single shock per axis).
[2] One year stability defined according to IEEE 528-2001: turn on / on, storage at -55°C and 85°C, -40°C to 125°C T cycling, -55°C to 85°C unpowered harass, vibration, shock (1000g, single shock per axis).
[3] Temperature coefficients are specified for a range of –40°C to 20°C, where temperature behavior is typically linear and coefficient are maximum.
[4] The bandwidth is defined as the frequency band for which the sensitivity has decreased by less than 3dB.
[5] The non linearity specification for ±200g version is validated to maximum ±100g range.

Maladière 83 | 2000 Neuchâtel | Switzerland
P +41 32 720 58 11 | F +41 32 720 57 84
www.colibrys.com

Supporting your great ideas
www.pewatron.com
PEWATRON
a member of the Angst + Pfister Group

COLIBRYS
SMART SENSING SOLUTIONS

DATASHEET

30S.MS9XXX.I.05.11

Environmental specifications

	MS9001	MS9002	MS9005	MS9010	MS9030	MS9050	MS9100	MS9200
Operating temperature range	-55°C to +125°C (-67°F to 255°F)							
Reliability	Results based on MIL-HDBK-217, notice 2, are available on request.							
Shock resistance	Up to 6'000 g (0.15ms half-sine, single shock, not repetitive, in one direction o, p or i)							
Recovery time	< 1ms (1000g, half-sine period 1ms, shocks in direction i)							
Vibration	20 g rms, 20-2000 Hz (random noise, 30 minutes in each direction o, p, i)							
ESD sensitivity	Class 2 (requirements MIL-STD-883-G, 1 Method 3015.7), Human Body Model 2kV							
Ultrasonic cleaning	The product can't be cleaned with ultrasonic bath. Such a cleaning process will largely affect the sensor integrity							

Packaging

The packaging is a standard LCC ceramic housing with a total of 20 pins. The precise dimensions are given in the next figure and the weight of the final product is typically smaller than 1.5 grams

The sealing process is qualified according to the MIL-STD-883-G and systematical leak tests are performed up to $5 \cdot 10^{-8}$ atm·cm^3/s.

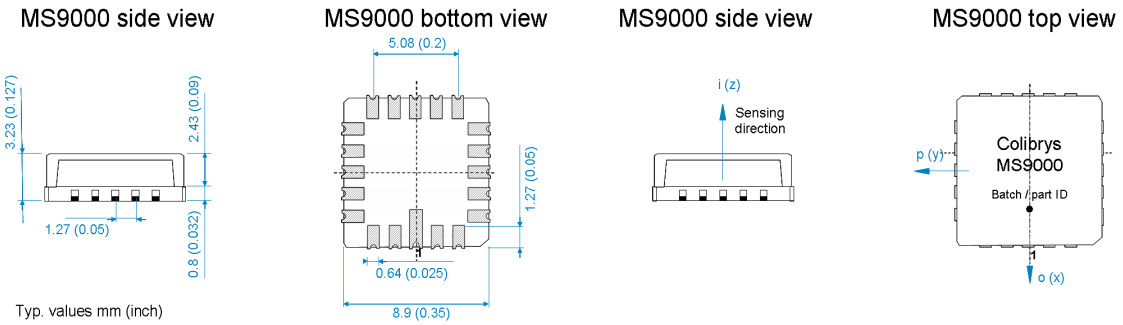

Typ. values mm (inch)

SMD Mounting

The MS9000 is RoHS compliant suitable for lead free soldering process and SMD mounting. It must be tightly fixed to the PCB, using the bottom of the housing as reference plane to ensure a good axis alignment. The stress induced by the soldering of the LCC package is a specific MEMS concern, especially when it comes to high-end capacitive sensors. In order to obtain good stress homogeneity and the best long term stability, all the leads of the accelerometer must be soldered to the pads of the PCB. See the Colibrys Application Note "LCC-48 housing, soldering conditions" available on our web site for more information about the LCC mounting process in general.

Physical specifications

	MS9001	MS9002	MS9005	MS9010	MS9030	MS9050	MS9100	MS9200
Packaging	Non magnetic, LCC, 20 pin housing							
Lead finishing	Au plating: 0.5 to 1.5 µm Ni plating: 1.27 to 8.89 µm (typ. 3 to 5 µm) W (tungsten): 10 to 15 µm							
Hermeticity	The product has been qualified according to MIL-STD-833-G. Hermetic sealing is systematically qualified at $5 \cdot 10^{-8}$ atm·cm^3/s							
Weight	< 1.5 grams							
Size	Typ. 8.9 x 8.9 x 3.23 mm (0.35 x 0.35 x 0.127 inch) Max. 9.2 x 9.2 x 3.5 mm (0.354 x 0.354 x 0.138 inch)							
Proximity effect	The sensor is sensitive to external parasitic capacitance. Moving metallic objects with large mass or parasitic effect at proximity of the accelerometer (mm range) must be avoided to insure best product performances.							
Reference plane for axis alignment	LCC must be tightly fixed to the PCB, using the bottom of the housing as reference plane for axis alignment. Using the lid as reference plane or for assembly may affect specifications and product reliability (i.e. axis alignment and/or lid soldering integrity)							

Maladière 83 | 2000 Neuchâtel | Switzerland
P +41 32 720 58 11 | F +41 32 720 57 84
www.colibrys.com

Supporting your great ideas
www.pewatron.com
PEWATRON
a member of the Angst + Pfister Group

COLIBRYS
SMART SENSING SOLUTIONS

DATASHEET

30S.MS9XXX.I.05.11

Principle of operation

The standard calibration voltage for the MS9000.D is (VDD-VSS) = 5V. Therefore, all specifications are valid for this supply voltage unless otherwise stated. Upon market request, the calibration of the product at a different voltage (between 2.5V and 5.5V) is possible. In such a case, the nominal output signal will vary according to the following equation:

$$Vout = (VDD - VSS) / 2 + Ai \cdot (K1 \cdot VDD / 5) \quad (1)$$
$$VAGND = (VDD - VSS) / 2 \quad (2)$$

According to this equation (1), the bias and scale factor are ratiometric to the power supply voltage.
A reference voltage VAGND is also provided at half of the power supply and corresponds to the output voltage at zero g. All sensors are calibrated to match the ideal response curve in term of offset, gain and non-linearity.

At every power-up, the microcontroller, used as memory, transfers the calibration parameters to the ASIC and then goes in a sleep mode. During this initialization phase, which takes less than 50ms, the current consumption goes up to max. 1,5mA @ 5V and at room temperature. Then, the normal operating current is set and remains less than 400µA under similar conditions.

The following model describes each sensor:

$$Vout = k_1 \cdot (k_0 + A_i + k_2 A_i^2 + k_3 A_i^3 + k_p A_p + k_o A_o + k_{ip} A_i A_p + k_{io} A_i A_o + E)$$

where

- Ai, Ap, Ao are the accelerations for each axes of the sensor with:
  - I : input axis (z axis)
  - p: pendulous axis (y axis)
  - o: output axis, also named pivot or hinge axis (x axis)
- K1 is accelerometer scale factor [V/g]
- K0 is bias [g]
- K2 is second order non linearity [g/g2]
- K3 is third order non-linearity [g/g3]
- Kp is pendulous cross axis non linearity [rad]
- Ko is output cross axis non linearity [rad]
- Kip, Kio are cross-coupling coefficients [rad/g]
- E is the residual noise [g]

Electrical specifications

	MS9001	MS9002	MS9005	MS9010	MS9030	MS9050	MS9100	MS9200
Input voltage (VDD – VSS)	2.5 to 5.5 VDC. The standard voltage for calibration is 5.0 VDC.							
Output voltage range	From 0.5 to 4.5 VDC @ 5.0 VDC input voltage (VDD/2 at 0g)							
Operating current consumption	< 400 µA @ 5.0 VDC							
Initialization & reset current consumption	Typ. 1500 µA @ 5.0 VDC during the initialization phase (less than 35 ms at room temperature)							
Reset	The sensor is Brown out protected. A reset occurs when the power supply jumps more than -0.46 V with a slope >380V/s or if the power supply drops below 2.2V. The recovery time is typ. 25 ms (max 35 ms)							
Output impedance / load	Min. 50 kΩ at Vout (pin 8) and VAGND (pin 5) Max. 50 pF at Vout (pin 8) and Max. 100 µF at VAGND (pin 5)							

Temperature sensor specifications

Output Voltage at 20°C	Typ: 1.632 V
Sensitivity	Typ: -11.77 mV/°C
Long term stability	Max -0.03°C to +0.09°C (1000h @ 150°C)
Accuracy	± 5°C (From -40°C to 125°C)

COLIBRYS
SMART SENSING SOLUTIONS

DATASHEET

30S.MS9XXX.I.05.11

Temperature compensation

The MS9000 delivers an output signal without any internal temperature compensation. The intrinsic temperature coefficient is quite small but can be further improved through a calibration, using the temperature provided by the internal temperature sensor. Third order compensation is generally required for a coherent modeling of a MS9000.D.

Sensor connections and power supply requirements

The detailed block diagram is given in the next figure

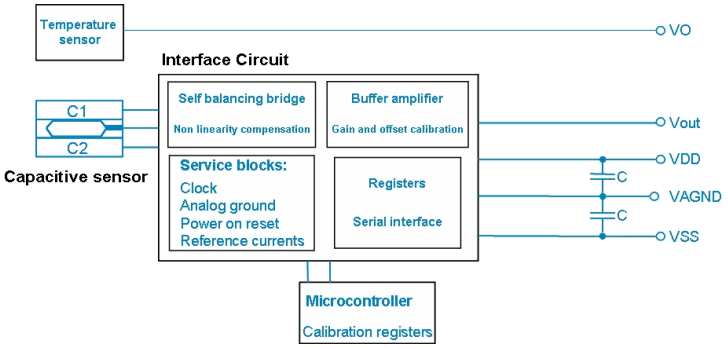

Components in the LCC20 packaging:

- 1-axis silicon MEMS sensor
- ASIC
- Microcontroller
- Temperature sensor
- Pull down resistor

It is strongly recommended to use decoupling capacitors [C] of 1µF each between VDD and VAGND and between VAGND and VSS, placed as close as possible from the accelerometer. COG or X7R @ 5% capacitor types are recommended. On top, the VAGND track should be as short as possible. Any other setup will potentially affect the bias calibration and stability.

MS9000 top view

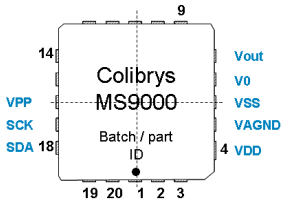

Pin	MS9000 Description	Notes
4	VDD	Power supply
5	VAGND	Accelerometer output reference voltage (VDD / 2)
6	VSS	Ground
7	VO	Temperature sensor output
8	Vout	Accelerometer output signal
16	VPP (Colibrys internal calibration pin)	**Must** be connected to VSS
17	SCK (Colibrys internal calibration pin)	**Must** be connected to VSS
18	SDA (Colibrys internal calibration pin)	**Must** be connected to VSS

Quality

- Colibrys is ISO 9001:2008, ISO 14001:2004 and OHSAS 18001:2007 certified
- Colibrys is in compliant with the European Community Regulation on chemicals and their safe use (EC 1907/2006) REACH.
- MS9000 products comply with the EU-RoHS directive 2002/95/EC (Restrictions on hazardous substances) regulations.
- MS9000 products are complaints with the Swiss LSPro : 930.11 dedicated to the security of products
  Note:
  - *MS9000 accelerometers are available for sales to professional only*
  - *Les accéléromètres MS9000 ne sont disponibles à la vente que pour des clients professionnels*
  - *Die Produkte der Serie MS9000 sind nur im Vertrieb für kommerzielle Kunden verfügbar*
  - *Gli accelerometri MS9000 sono disponibili alla vendita soltanto per clienti professionisti*
- Recycling : please use appropriate recycling process adapted to electrical and electronic components

Maladière 83 | 2000 Neuchâtel | Switzerland
P +41 32 720 58 11 | F +41 32 720 57 84
www.colibrys.com

Supporting your great ideas
www.pewatron.com
PEWATRON
a member of the Angst + Pfister Group

COLIBRYS
SMART SENSING SOLUTIONS

DATASHEET

30S.MS9XXX.I.05.11

Glossary of parameters of the Data Sheet

g[m/s^2]

Unit of acceleration, equal to standard value of the earth gravity (Accelerometer specifications and data supplied by Colibrys use 9.80665 m/s²)

Bias [mg]

The accelerometer output at zero g

Bias stability [mg]

Maximum drift of the bias after extreme variation of external conditions (aging, temperature cycles, shock, vibration)

Bias temperature coefficient [µg/°C]

Maximum variation of the bias calibration under variable external temperature conditions (slope of the best fit straight line through the curve of bias vs. temperature). Bias Temperature Coefficient is specified between –40°C and +50°C, where temperature behaviour is linear

Scale factor sensitivity [mV/g]

The ratio of the change in output (in volts) to a unit change of the input (in units of acceleration); thus given in mV/g

Scale factor temperature coefficient [ppm/°C]

Maximum deviation of the scale factor under variable external temperature conditions

Temperature sensitivity

Sensitivity of a given performance characteristic (typically scale factor, bias, or axis misalignment) to operating temperature, specified as worst case value over the full operating temperature range. Expressed as the change of the characteristic per degree of temperature change; a signed quantity, typically in ppm/°C for scale factor and g/°C for bias. This figure is useful for predicting maximum scale factor error with temperature, as a variable when modelling is not accomplished

Axis alignment [mrad]

The extent to which the accelerometer's true sensitive axis deviates from being perfectly orthogonal to the accelerometer's reference mounting surface when mounted to a flat surface

Resolution, Threshold [mg]

Value of the smallest acceleration that can be significantly measured

Non-linearity [% of FS]

The maximum deviation of accelerometer output from the best linear fit over the full operating range. The deviation is expressed as a percentage of the full-scale output (+A_{FS}).

Bandwidth [Hz]

Frequency range from DC to F-3dB where the variation of the frequency response is less than –3dB or -5% for vibration sensors

Resonant frequency nominal [kHz]

Typical value of the resonant frequency of the mounted system

Noise [µV/√Hz or µg/√Hz]

Undesired perturbations in the accelerometer output signal, which are generally uncorrelated with desired or anticipated input accelerations

Colibrys reserves the right to change these data without notice.

Maladière 83 | 2000 Neuchâtel | Switzerland
P +41 32 720 58 11 | F +41 32 720 57 84
www.colibrys.com

Supporting your great ideas
www.pewatron.com
PEWATRON
a member of the Angst + Pfister Group

PEWATRON
a member of the Angst + Pfister Group

We are here for you. Addresses and Contacts

Sales Switzerland

Postcode 3000 – 9999
Liechtenstein

Matthias Rüegg
Ruhbergstrasse 32
CH-9230 Flawil

Phone + 41 44 877 35 18
Mobile + 41 76 491 66 66
Fax + 41 44 877 35 19

matthias.rueegg@pewatron.com

Postcode 1000 – 2999

Raffael Favaretto
Route d'Oron 124
CH-1673 Promasens

Phone + 41 44 877 35 22
Mobile + 41 76 444 63 14
Fax + 41 44 877 35 23

raffael.favaretto@pewatron.com

Sales Germany

Postcode 60000 – 79999

Dieter Hirthe
Mühlweg 23
D-71554 Weissach i.T.

Phone + 49 719 149 60 58
Mobile + 49 163 762 74 30
Fax + 49 719 193 31 88

dieter.hirthe@pewatron.com

Postcode 10000 – 59999
Postcode 80000 – 99999

Kurt Stritzelberger
Neumarkter Str. 86a
D-81673 Munich

Phone + 49 89 260 38 47
Mobile + 49 171 803 41 35
Fax + 49 89 43 10 91 91

kurt.stritzelberger@pewatron.com

Key Accounts
Aerospace and Defence

Claus Wübbena
Vogelkamp 26
D-26655 Westerstede

Phone + 49 4488 5204 614
Mobile + 49 173 9700 691
Fax + 49 4488 5204 616

claus.wuebbena@pewatron.com

Sales Austria

Kurt Stritzelberger
Neumarkter Str. 86a
D-81673 Munich

Phone + 49 89 260 38 47
Mobile + 49 17 18 03 41 35
Fax + 49 89 43 10 91 91

kurt.stritzelberger@pewatron.com

Sales Other Countries / Product Management

Sensors

Physical Sensors
Data Acquisition

Peter Felder
Phone + 41 44 877 35 05
peter.felder@pewatron.com

Geometrical Sensors

Eric Letsch
Phone + 41 44 877 35 14
eric.letsch@pewatron.com

Power Supplies

DC-DC Converters
Switching Power Supplies
DC-AC Inverters

Sebastiano Leggio
Phone + 41 44 877 35 06
sebastiano.leggio@pewatron.com

E-Components

Current Sensors
Man Machine Interface
Measurement Probes

Sebastiano Leggio
Phone + 41 44 877 35 06
sebastiano.leggio@pewatron.com

PEWATRON AG
Thurgauerstrasse 66
CH-8052 Zurich

Phone + 41 44 877 35 00
Fax + 41 44 877 35 25

www.pewatron.com
info@pewatron.com