measurement SPECIALTIES

FC22 Compression Load Cell

- **10 – 100 lbf Ranges**
- **High Level or mV Outputs**
- **Interchangeable**
- **Compact Easy to Fixture Design**

DESCRIPTION

The FC22 is a medium compression force sensor that creates new markets previously unrealizable due to cost and performance constraints. The FC22 offers normalized zero and span for interchangeability and is thermally compensated for changes in zero and span with respect to temperature.

The FC22 incorporates MEAS' proprietary Microfused™ technology which employs micromachined silicon piezoresistive strain gages fused with high temperature glass to a high performance stainless steel substrate. Microfused™ technology eliminates age-sensitive organic epoxies used in traditional load cell designs providing excellent long term span and zero stability. The FC22 measures direct force and is therefore not subject to lead-die fatigue failure common with competitive designs which use a pressure capsule embedded within a silicone gel-filled cavity. Operating at very low strains, Microfused™ technology provides an essentially unlimited cycle life expectancy, superior resolution, and high over-range capabilities.

Cost-optimization of the FC22 brings your OEM product to life whether you need thousands or millions of load cells annually. Although the standard model is ideal for a wide range of applications, our dedicated design team at our Load Cell Engineering Center is ready to provide you with custom designs for your OEM applications.

Please refer to the FS20 for lower force applications or the FC23 for higher force applications.

FEATURES

- Small Size
- Low Noise
- Robust: High Over-Range Capability
- High Reliability
- Low Deflection
- Essentially Unlimited Cycle Life Expectancy
- Low Off Center Errors
- Fast Response Time
- 10 to 100 lbf Ranges
- Reverse Polarity Protected

APPLICATIONS

- Medical Infusion Pumps
- Robotics End-Effectors
- Variable Force Control
- Load and Compression Sensing
- Exercise Machines
- Pumps
- Contact Sensing
- Weighing
- Household Appliances

Supporting your great ideas www.pewatron.com PEWATRON a member of the Angst + Pfister Group

measurement SPECIALTIES

FC22 Compression Load Cell

STANDARD RANGES

Range	lbf
0 to 10	•
0 to 25	•
0 to 50	•
0 to 100	•

PERFORMANCE SPECIFICATIONS

Supply Voltage: 5.0V, Ambient Temperature: 25℃ (unless otherwise specified)

PARAMETERS	MIN	TYP	MAX	UNITS	NOTES
Span (Unamplified)	19	20	21	mV	1
Span (Amplified)	3.88	4.00	4.12	V	1
Zero Force Output (Unamplified)	-1	0	1	mV	1
Zero Force Output (Amplified)	0.3	0.5	0.7	V	1
Accuracy (non linearity, hysteresis, and repeatability)		±1		%Span	2
Output Resistance (Unamplified)		2.2		kΩ	
Input Resistance (Unamplified)		3		kΩ	
Temperature Error – Zero	-1.25		1.25	%Span	3
Temperature Error – Span	-1.25		1.25	%Span	3
Long Term Stability (1 year)		±1		%Span	
Maximum Overload			2.5X	Rated	
Compensated Temperature	0		50	℃	
Operating Temperature	-40		+85	℃	
Storage Temperature	-40		+85	℃	
Excitation Voltage (Unamplified)			5	Vdc	
Excitation Voltage (Amplified)	3.3		5	Vdc	
Isolation Resistance (250Vdc)	50			MΩ	
Deflection at Rated Load			0.05	mm	
Humidity	0		90	%RH	
Weight		18.41		grams	

For custom configurations, consult factory.

Notes

1. Ratiometric to supply.
2. Best fit straight line.
3. Maximum temperature error over compensated range with respect to 25℃.

CE Compliance

IEC61000-4-2 [4 kV/ 4kV (Air/Contact)]
IEC61000-4-3 (3 V/m)
IEC55022 Class A

Supporting your great ideas www.pewatron.com PEWATRON a member of the Angst + Pfister Group

FC22 Compression Load Cell

DIMENSIONS

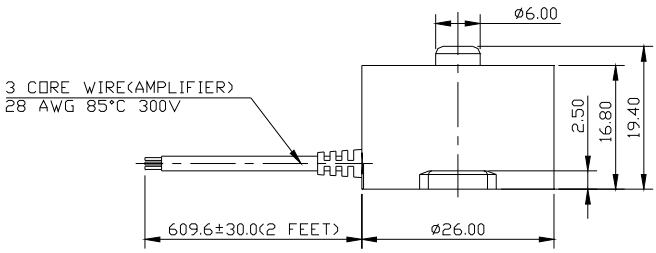

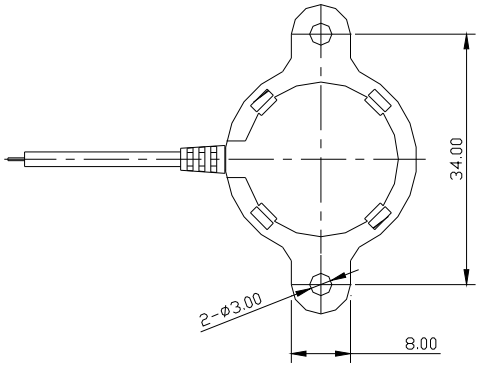

CONNECTIONS

Millivolt Bridge Version

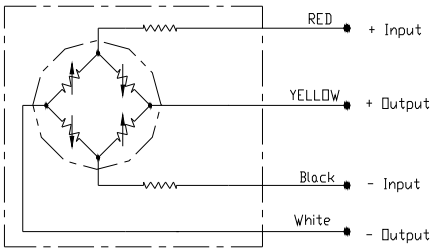

High Level Amplified Output

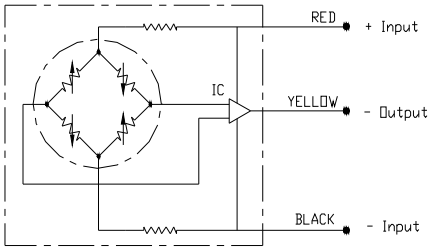

Supporting your great ideas www.pewatron.com
PEWATRON a member of the Angst + Pfister Group

FC22 Compression Load Cell

ORDERING INFORMATION

FC22 3 1 - 0000 - 0010 - L

- Units (L = lbf, N = Newtons)
- Multiplier (- = None)
- Force Range
- Specials (Reserved for Custom Designs)
- Connection (1 = 2ft Cable)
- Output (1 = 20 mV, 3 = 0.5 - 4.5V)
- Model

NORTH AMERICA

Measurement Specialties
45738 Northport Loop West
Fremont, CA 94538
Tel: 1-800-767-1888
Fax: 1-510-498-1578
Sales: pfg.cs.amer@meas-spec.com

EUROPE

Measurement Specialties
(Europe), Ltd.
26 Rue des Dames
78340 Les Clayes-sous-Bois, France
Tel: +33 (0) 130 79 33 00
Fax: +33 (0) 134 81 03 59
Sales: pfg.cs.emea@meas-spec.com

ASIA

Measurement Specialties
(China), Ltd.
F1.6-4D, Tian An Development
Compound
Shenzhen, China 518048
Tel: +86 755 8330 1004
Fax: +86 755 8330 6797
Sales: pfg.cs.asia@meas-spec.com

The information in this sheet has been carefully reviewed and is believed to be accurate; however, no responsibility is assumed for inaccuracies. Furthermore, this information does not convey to the purchaser of such devices any license under the patent rights to the manufacturer. Measurement Specialties, Inc. reserves the right to make changes without further notice to any product herein. Measurement Specialties, Inc. makes no warranty, representation or guarantee regarding the suitability of its product for any particular purpose, nor does Measurement Specialties, Inc. assume any liability arising out of the application or use of any product or circuit and specifically disclaims any and all liability, including without limitation consequential or incidental damages. Typical parameters can and do vary in different applications. All operating parameters must be validated for each customer application by customer's technical experts. Measurement Specialties, Inc. does not convey any license under its patent rights nor the rights of others.

Supporting your great ideas www.pewatron.com
PEWATRON a member of the Angst + Pfister Group

PEWATRON
a member of the Angst + Pfister Group

We are here for you. Addresses and Contacts

Sales Switzerland

Postcode 3000 – 9999
Liechtenstein

Matthias Rüegg
Ruhbergstrasse 32
CH-9230 Flawil

Phone + 41 44 877 35 18
Mobile + 41 76 491 66 66
Fax + 41 44 877 35 19

matthias.rueegg@pewatron.com

Postcode 1000 – 2999

Raffael Favaretto
Route d'Oron 124
CH-1673 Promasens

Phone + 41 44 877 35 22
Mobile + 41 76 444 63 14
Fax + 41 44 877 35 23

raffael.favaretto@pewatron.com

Sales Germany

Postcode 60000 – 79999

Dieter Hirthe
Mühlweg 23
D-71554 Weissach i.T.

Phone + 49 719 149 60 58
Mobile + 49 163 762 74 30
Fax + 49 719 193 31 88

dieter.hirthe@pewatron.com

Postcode 10000 – 59999
Postcode 80000 – 99999

Kurt Stritzelberger
Neumarkter Str. 86a
D-81673 Munich

Phone + 49 89 260 38 47
Mobile + 49 171 803 41 35
Fax + 49 89 43 10 91 91

kurt.stritzelberger@pewatron.com

Key Accounts
Aerospace and Defence

Claus Wübbena
Vogelkamp 26
D-26655 Westerstede

Phone + 49 4488 5204 614
Mobile + 49 173 9700 691
Fax + 49 4488 5204 616

claus.wuebbena@pewatron.com

Sales Austria

Kurt Stritzelberger
Neumarkter Str. 86a
D-81673 Munich

Phone + 49 89 260 38 47
Mobile + 49 17 18 03 41 35
Fax + 49 89 43 10 91 91

kurt.stritzelberger@pewatron.com

Sales Other Countries / Product Management

Sensors

Physical Sensors
Data Acquisition

Peter Felder
Phone + 41 44 877 35 05
peter.felder@pewatron.com

Geometrical Sensors

Eric Letsch
Phone + 41 44 877 35 14
eric.letsch@pewatron.com

Power Supplies

DC-DC Converters
Switching Power Supplies
DC-AC Inverters

Sebastiano Leggio
Phone + 41 44 877 35 06
sebastiano.leggio@pewatron.com

E-Components

Current Sensors
Man Machine Interface
Measurement Probes

Sebastiano Leggio
Phone + 41 44 877 35 06
sebastiano.leggio@pewatron.com

PEWATRON AG
Thurgauerstrasse 66
CH-8052 Zurich

Phone + 41 44 877 35 00
Fax + 41 44 877 35 25

www.pewatron.com
info@pewatron.com