E4 Miniature Optical Kit Encoder

Description

The E4 miniature encoder is designed to provide digital quadrature encoder feedback for applications with limited space constraints. The E4 utilizes a traditional set-screw codewheel which accommodates shaft sizes from 1.5mm to 4mm in diameter.

For high quantity OEM applications US Digital offers a cost saving OEM packaging option. When a set-screw is not required, the E4P is the ideal choice for high quantity OEM applications (see the E4P page).

The E4 base provides mounting holes for two #3-48, length 1/4" or two M2.5x.45mm, length 6mm screws on a .586" bolt circle. When mounting holes are not available, a pre-applied transfer adhesive (with peel-off backing) is available for "stick-on" mounting.

The internal components consist of a precision machined aluminum hub and a encoder circuit board module.

The encoder cover is easily snapped onto the base and is embossed with the connector pin-out.

The E4 series encoder can be connected by using a (high retention 4-conductor snap-in polarized 1.25mm pitch) connector. Mating cables and connectors (see the Cables / Connectors page) are not included and are available separately.

Features

- **ROHS Compliant**
- Minimum shaft length of .285"
- Fits shaft diameters of .059" to .157" (1.5mm to 4mm)
- High retention snap-in polarized connector
- Accepts .020" (.5mm) axial shaft play
- Off-axis mounting tolerance of .010"
- Tracks from 0 to 60,000 cycles/sec
- 100 to 360 cycles per revolution (CPR)
- 400 to 1440 pulses per revolution (PPR)
- 2 channel quadrature TTL squarewave outputs
- -20 to +100 C operating temperature

Mechanical Drawing

E4 Miniature Optical Kit Encoder

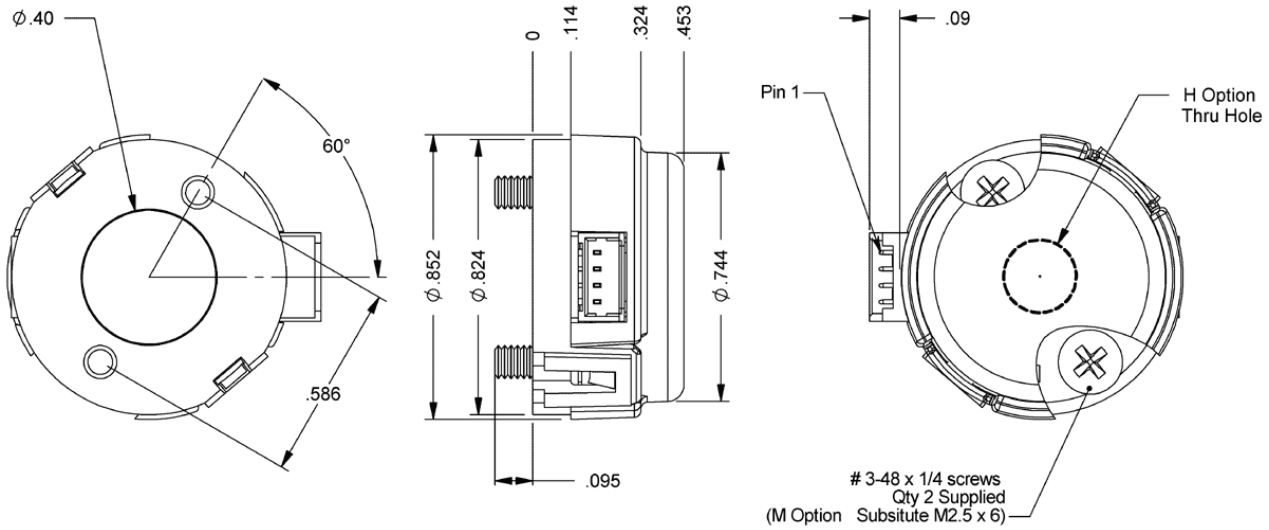

Mechanical

Parameter	Dimension	Units
Moment of Inertia	7.4E^-6	oz-in-s²
Hub Set Screw Size	#3-48 or #4-48	in.
Hex Wrench Size	.050	in.
Mounting Screw Size	#3-48 x 1/4"	-
M-option Screw Size	M2.5x.45mm, length 6mm	-
Screw Bolt Circle Diameter	.586 ± .002	in.
Required Shaft Length*	.285 to .395	in.

* Includes axial play.

Absolute Maximum Ratings

Parameter	Min.	Max.	Units
Vibration (5 to 2kHz)	-	20	g
Shaft Axial Play	-	.020	in.
Off-axis Mounting Tolerance	-	.010	in.
Acceleration	-	250,000	rad/sec²
Maximum RPM e.x. CPR = 360, max. rpm = 10000 e.x. CPR = 100, max. rpm = 36000		minimum value of (3600000/CPR) and (60000)	rpm
Relative Humidity	-	90	%

E4 Miniature Optical Kit Encoder

Parameter	Min.	Max.	Units
Storage Temperature	-40	100	C
Operating Temperature	-20	100	C

- Note: 60000 rpm is the maximum rpm due to mechanical considerations. The maximum rpm due to the module's 60kHz maximum count frequency is (3600000/CPR).

Phase Relationship

A leads B for clockwise shaft rotation, B leads A for counter clockwise shaft rotation viewed from the shaft/bushing side of the encoder (*see the AEDRpage*).

Electrical

For complete details see the AEDR page.

Torque

Parameter	Torque
Hub Set Screw to Shaft	1.5-2.0 in.-lbs.
Base to Mounting Surface	2-3 in.-lbs.

Options

H-option (Hole in Cover)

The **H**-option adds a hole in the cover for the shaft to pass through:

- For shaft diameters of 1.5mm to 2.5mm, a 0.143" hole is supplied.
- For shaft diameters of 3mm and 1/8", a 0.170" hole is supplied.
- For shaft diameters of 5/32" and 4mm, a 0.242" hole is supplied.

L-option (Low Power Strobe)

L-option To reduce the average power requirements, the L-option version of the **E4P** power can be strobed on just long enough to sample outputs A and B. This option is the same as our standard **E4P**, except the internal power bypass capacitor is not installed. The outputs settling time is typically 200 to 400 nano seconds after power up. The minimum sample frequency must be less than the maximum RPM X the CPR / 10.

M-option (Metric Mounting Screws)

Provides alternate metric M2.5x.45mm, length 6mm screws. When**M**-option is NOT specified the default is #3-48 x 1/4" screws.

T-option (Transfer Adhesive)

When mounting holes are not available, a pre-applied transfer adhesive (with peel-off backing) is available for "stick-on" mounting. Use

the centering tool (above) to position the base. **T**-option specifies transfer adhesive.

Accessories

Centering Tools

Part #: MCTOOL - (Shaft Diameter*)

Description: This reusable tool provides a simple method for accurately centering the **E4** base onto the shaft.

Material: Aluminum.

Please note: A centering tool is highly recommended when using the **T**-option transfer adhesive.

* See Ordering Information below for available Shaft Diameters.

Spacer Tool

Part #: SPACER-4216

Description: This reusable tool is used to properly space the codewheel from the encoder base. Nylon. Round. Provides air gap of 0.07" to 0.03".

Hex Tools

Part #: HEXD-050

Description: Hex driver, .050" flat-to-flat for 3-48 or 4-48 set screws.

Part #: HEXW-050

Description: Hex wrench, .050" flat-to-flat for 3-48 or 4-48 set screws.

Pin-out

Pin	Description
1	+5VDC power
2	A channel
3	Ground
4	B channel

Assembly Instructions

E4 Miniature Optical Kit Encoder

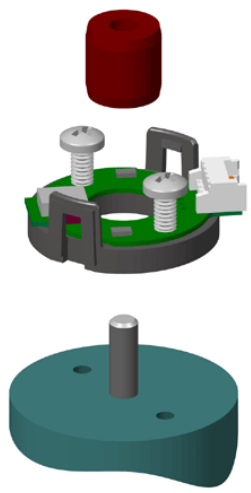

1. Base Mounting

Place base onto shaft. Secure base to mounting surface using two screws.

Transfer Adhesive: Peel off paper backing, place centering tool into center hole of base, slip entering tool onto shaft and slide base and centering tool down onto mounting surface as one piece. Press to form a good bond, then slip centering tool off shaft and continue with standard mounting instructions.

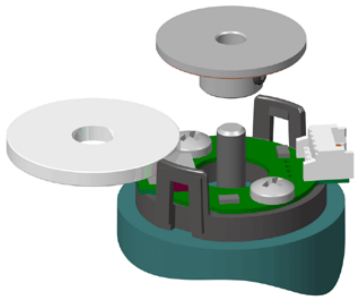

2. Spacer Installation

Place spacer tool on optic module as shown below.

E4 Miniature Optical Kit Encoder

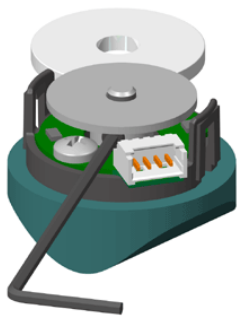

3. Codewheel Installation

Slip codewheel onto shaft until it bottoms out against spacer tool. Spacer tool provides an air gap of 0.07" 0.03". Tighten set screw with either the hex wrench / hex driver while pressing down on codewheel.

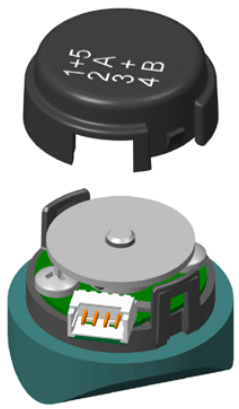

4. Cover Installation

Place housing (cover) on. With thumb and finger, squeeze ears together to insure that cover fully latches.

E4 Miniature Optical Kit Encoder

Ordering Information

E4 - [ ] - [ ] - [ ] - [ ] - [ ] - [ ]

CPR	Bore	Power	Cover	Base	Packaging
100	059 = *1.5mm*	D =*Default*	D = *Default*	D =*Default*	B =*Encoder components packaged in bulk. One spacer tool and one hex driver per 100 encoders*
108	079 = *2mm*	L =*Low Power Strobe*	H =*Hole in Cover*	M =*Alternate metric M2.5x.45mm,length 6mm screws*	1 =*Each encoder packaged individually. One spacer tool and one hex driver per 100 encoders.*
120	091 = *2.3mm*			T =*Transfer Adhesive*	2 =*Each encoder packaged individually with one spacer tool and one hex wrench per encoder.*
125	098 = *2.5mm*				3 =*Each encoder packaged individually with one spacer tool, one hex wrench, and one centering tool per encoder.*
128	118 = *3mm*				4 =*Encoder cover, base, pcb, and screws are all packaged separately in bulk. PCB's come in scored panels that need to be broken out by the customer. Additional assembly is required.*
200	125 = *1/8"*				
250	156 = *5/32"*				
256	157 = *4mm*				
300					
360					

Notes

- Cables and connectors are not included and must be ordered separately.
- This product is warranted against defects in materials and workmanship for two years.

PEWATRON
a member of the Angst + Pfister Group

We are here for you. Addresses and Contacts

Sales Switzerland

Postcode 3000 – 9999
Liechtenstein

Matthias Rüegg
Ruhbergstrasse 32
CH-9230 Flawil

Phone + 41 44 877 35 18
Mobile + 41 76 491 66 66
Fax + 41 44 877 35 19

matthias.rueegg@pewatron.com

Postcode 1000 – 2999

Raffael Favaretto
Route d'Oron 124
CH-1673 Promasens

Phone + 41 44 877 35 22
Mobile + 41 76 444 63 14
Fax + 41 44 877 35 23

raffael.favaretto@pewatron.com

Sales Germany

Postcode 60000 – 79999

Dieter Hirthe
Mühlweg 23
D-71554 Weissach i.T.

Phone + 49 719 149 60 58
Mobile + 49 163 762 74 30
Fax + 49 719 193 31 88

dieter.hirthe@pewatron.com

Postcode 10000 – 59999
Postcode 80000 – 99999

Kurt Stritzelberger
Neumarkter Str. 86a
D-81673 Munich

Phone + 49 89 260 38 47
Mobile + 49 171 803 41 35
Fax + 49 89 43 10 91 91

kurt.stritzelberger@pewatron.com

Key Accounts
Aerospace and Defence

Claus Wübbena
Vogelkamp 26
D-26655 Westerstede

Phone + 49 4488 5204 614
Mobile + 49 173 9700 691
Fax + 49 4488 5204 616

claus.wuebbena@pewatron.com

Sales Austria

Kurt Stritzelberger
Neumarkter Str. 86a
D-81673 Munich

Phone + 49 89 260 38 47
Mobile + 49 17 18 03 41 35
Fax + 49 89 43 10 91 91

kurt.stritzelberger@pewatron.com

Sales Other Countries / Product Management

Sensors

Physical Sensors
Data Acquisition

Peter Felder
Phone + 41 44 877 35 05
peter.felder@pewatron.com

Geometrical Sensors

Eric Letsch
Phone + 41 44 877 35 14
eric.letsch@pewatron.com

Power Supplies

DC-DC Converters
Switching Power Supplies
DC-AC Inverters

Sebastiano Leggio
Phone + 41 44 877 35 06
sebastiano.leggio@pewatron.com

E-Components

Current Sensors
Man Machine Interface
Measurement Probes

Sebastiano Leggio
Phone + 41 44 877 35 06
sebastiano.leggio@pewatron.com

PEWATRON AG
Thurgauerstrasse 66
CH-8052 Zurich

Phone + 41 44 877 35 00
Fax + 41 44 877 35 25

www.pewatron.com
info@pewatron.com