E3 Optical Kit Encoder

RoHS COMPLIANT

Description

The E3 is a high resolution rotary encoder with a molded polycarbonate enclosure, which utilizes either a 5-pin locking or standard connector. This optical incremental encoder is designed to easily mount to and dismount from an existing shaft to provide digital feedback information.

The E3 is easy to add to existing applications and only consists of four main components; base, cover, hub/code wheel and optical encoder module.

The E3 is normally designed for applications of 6 feet or less. For longer cable lengths, adding a PC4 / PC5 differential line driver is recommended.

The base and cover are both constructed of rugged 20% glass filled polycarbonate. Attachment of the base to a surface may be accomplished by utilizing one of several machine screw bolt circle options. Positioning of the base to the centerline of a shaft is ensured by use of a centering tool (sold separately). The cover is securely attached to the base with two 4-40 flat head screws to provide a resilient package protecting the internal components.

The internal components consist of a shatterproof mylar disk mounted to a precision machined aluminum hub and an encoder module. The hub is available for diameters up to 1". The module consists of a highly collimated solid state light source and monolithic phased array sensor, which together provide a system extremely tolerant to mechanical misalignments.

Connection to the E3 product is made through either a 5-pin locking or standard connector (sold separately). The mating connectors are available from US Digital with several cable options and lengths.

Features

- Quick, simple assembly and disassembly
- Rugged screw-together housing
- Accepts .010" axial shaft play
- Tracks from 0 to 100,000 cycles/sec
- Small size
- 64 to 2500 cycles per revolution (CPR)
- 256 to 10,000 pulses per revolution (PPR)
- 2 channel quadrature TTL squarewave outputs
- Optional index (3rd channel)
- -40 to +100C operating temperature

Rev. 120130070900

E3 Optical Kit Encoder

RoHS COMPLIANT

Default

E3 Optical Kit Encoder

RELEASE DATE 11/14/2011

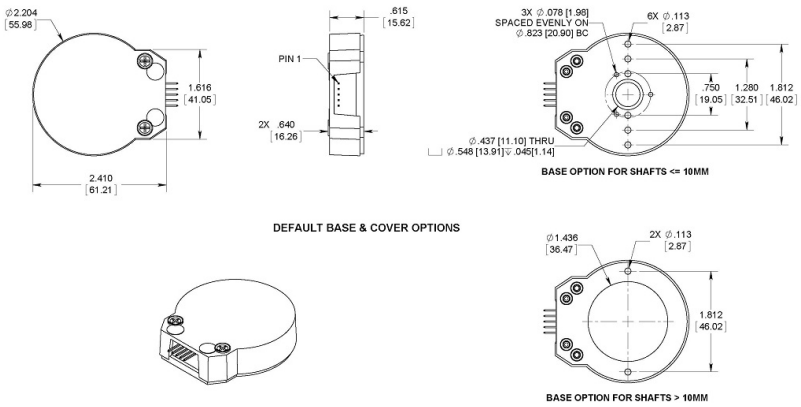

US DIGITAL 1400 NE 136th Avenue Vancouver, Washington 98684, USA info@usdigital.com www.usdigital.com Local: 360.260.2468 Toll-free: 800.736.0194

UNITS: INCHES [MM]
METRIC DIMENSIONS FOR REFERENCE ONLY

Base & Cover Options

E3 Optical Kit Encoder Base & Cover Options

RELEASE DATE 11/14/2011

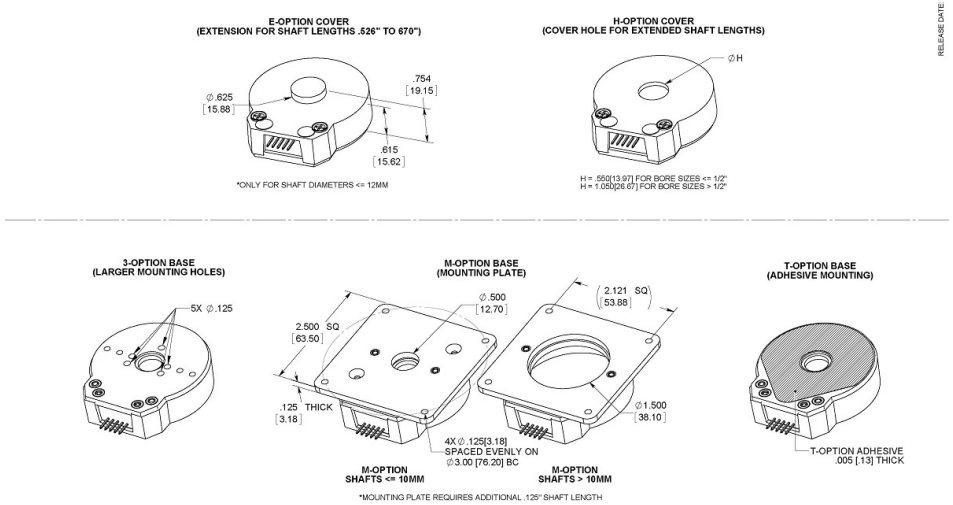

US DIGITAL 1400 NE 136th Avenue Vancouver, Washington 98684, USA info@usdigital.com www.usdigital.com Local: 360.260.2468 Toll-free: 800.736.0194

UNITS: INCHES [MM]
METRIC DIMENSIONS FOR REFERENCE ONLY

Rev. 120130070900

E3 Optical Kit Encoder

RoHS COMPLIANT

Mechanical

Parameter	Dimension	Units
Encoder Base Plate Thickness	.135	in.
Hub Set Screw	3-48 or 4-48	in.
3 Mounting Screw Size	0-80	in.
3 Screw Bolt Circle Diameter	.823 ±.005*	in.
2 Mounting Screw Size	2-56 or 4-40	in.
2 Screw Bolt Circle Diameter	.750 ±.005	in.
2 Screw Bolt Circle Diameter	1.280 ±.005	in.
2 Screw Bolt Circle Diameter	1.812 ±.005	in.
Required Shaft Length	.445 to .525**	in.
With **E**-option*	.445 to .670**	in.
With **H**-option	>.445**	in.
Index alignment to hub set screw	180 ° +/-5 °	mech. degrees

* Only for shaft diameters <.472".

** Add .125" to the required shaft length when using **M**-option.

Absolute Maximum Ratings

Parameter	Max.	Units
Vibration (5Hz to 2kHz)	20	G
Shaft Axial Play	±0.01	in.
Shaft Eccentricity Plus Radial Play	0.004	in.
Acceleration	250,000	rad/sec²
Maximum RPM e.x. CPR = 2500, max. rpm = 2400 e.x. CPR = 1000, max. rpm = 6000 e.x. CPR = 64, max. rpm = 60000	minimum value of (6000000/CPR) and (60000)	rpm

- Note that radial play translates directly to position inaccuracy.
- Note: 60000 rpm is the maximum rpm due to mechanical considerations. The maximum rpm due to the module's 100kHz maximum count frequency is (6000000/CPR).

Phase Relationship

A leads B for clockwise shaft rotation, and B leads A for counterclockwise rotation viewed from the cover/label side of the encoder (*see the EM1 / HEDSpage*).

Rev. 120130070900

RoHS COMPLIANT

Electrical

- Specifications apply over entire operating temperature range.
- Typical values are specified at Vcc = 5.0Vdc and 25 ° C.
- For complete details see the EM1 and HEDS product pages.

	Supply Current	Output voltage low	Output voltage high	
Resolution	Typ / Max	Max	Min	Based on
100, 200, 400, 500, 512, 1000, 1024 CPR, non-index	17 / 40 mA	0.4 volts @ 3.2mA	2.4 volts @ -200uA	Low-res HEDS
2000, 2048 CPR, non-index	57 / 85 mA	0.5 volts @ 8mA	2.4 volts @ -40uA	High-res HEDS
64 CPR, with index	27 / 30 mA	0.5 volts @ 8mA	2.0 volts @ -8mA	EM1
100, 200, 400, 500, 1000, 1024 CPR, with index	57 / 85 mA	0.5 volts @ 8mA	2.4 volts @ -40uA	High-res HEDS
1800 CPR, with index	55 / 57 mA	0.5 volts @ 8mA	2.0 volts @ -8mA	EM1
2000, 2048 CPR, with index	57 / 85 mA	0.5 volts @ 8mA	2.4 volts @ -40uA	High-res HEDS
2500 CPR, with index	55 / 57 mA	0.5 volts @ 8mA	2.0 volts @ -8mA	EM1

Torque Specifications

Parameter	Torque
Hub Set Screw to Shaft	2-3 in-lbs
Cover (4-40 screws through cover into base)	2-4 in-lbs
Base to Mounting Surface	4-6 in-lbs
Base to Mounting Adapter Plate	4-6 in-lbs
Adapter Plate to Mounting Surface	4-6 in-lbs
Module to Base	3.5-4 in-lbs

Module Identification

Be sure to keep different diameters, resolutions and options separated. The resolution of the optoelectronic modules and the code wheels must match. Index and non-index parts cannot be mixed since the optical patterns are different. An identifier is stamped on each optoelectronic module.

For Agilent Modules (HEDS): The 2-channel (non-index) version can be identified by a 9100 or 9200. The 3-channel (index) version can be identified by a 9140. One suffix letter specifies the resolution as shown in the table below.

For US Digital Modules (EM1): The first number identifies the size of the disk this module is to be used with. The second number identifies the resolution as shown in the table below. The 3-channel (index) version is standard and not denoted unless the module is non-index. The 2-channel (non-index) can be identified by a -N.

Disk	Standard	Index
64	-	2-64
100	S	S
200	C	C
400	E	E
500	E	F
512	A	-
1000	B	B
1024	J	J
1800	-	2-1800
2000	T	T
2048	U	T
2500	2-2500-N	2-2500

Pin-out

Pin	Description
1	Ground
2	Index
3	A channel
4	+5VDC power
5	B channel

Options

Index

Provides a single pulse per revolution.

3-option

3-option makes all five of these hole diameters .125". The .438" diameter center hole can mate with a motor boss for alignment. If a motor boss is lacking, a centering tool is usually required to mount the base in proper position to the shaft.

E-option

The **E**-option provides a cylindrical extension to the cover allowing for longer shafts of up .670". This option is only for shaft diameters <.472".

H-option

The **H**-option adds a hole to the cover for the shaft to pass through.

- Shafts <=1/2", a 0.55" diameter hole is supplied.
- Shafts >1/2", a 1.05" diameter hole is supplied.

M-option

These adapter plates are for mounting to a 3" diameter bolt circle. Use two 4-40 x 1/4" screws (sold separately) to attach the **E3** base to the plate. Comes attached when ordered with encoder.

T-option

When mounting holes are not available, a pre-applied transfer adhesive (with peel-off backing) is available for "stick-on" mounting. Use the centering tool (sold separately) to slide the base into position. **T**-option specifies transfer adhesive on the standard mounting base.

Instructions: To use transfer ahesive, peel off paper backing and slip tool into center hole of the base and slide both down shaft as one piece. Press to form a good bond, then slip tool off and continue with the standard mounting instructions. A centering tool is highly recommended when using transfer adhesive.

E3 Assembly Instructions

For Shafts Greater Than 0.394" (10mm):

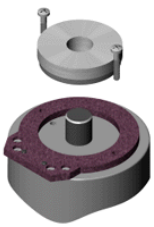

1. Base Mounting

Secure the base to the mounting surface using two or three screws (sold separately). If a centering tool is used, slip it over the shaft

and into the center hole of the base. Tighten the mounting screws and then remove the centering tool.

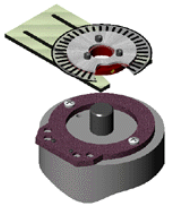

2. Spacer Installation

Push the spacer tool onto the bottom section of the hub/disk assembly. Make sure the spacer tool snaps only on the lower part of the hub. Align hub set screws as shown in drawing.

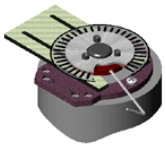

3. Hub/Disk Assembly Installation

Slip the hub over the shaft until it bottoms out against the spacer tool. Make sure the spacer tool clears the mounting screws on the base. Tighten both set screws with the hex wrench provided while pressing down on the hub. Remove the spacer tool.

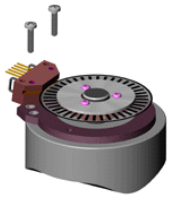

4. Encoder Module Installation

Orientate the module with the connector pins toward the top. Slide the module from front to back, being careful not to damage the disk. Stop when the two alignment pins on the base fit into the holes of the module. Secure with two 4-40 1/2" pan head screws (supplied).

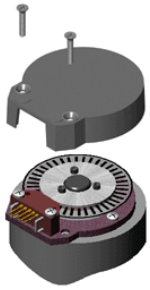

5. Cover Installation

Rev. 120130070900

Place the cover over the assembly and secure with the two 4-40 5/8" flat head screws (supplied).

For Shafts Less Than or Equal To 0.394" (10mm):

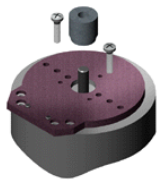

1. Base Mounting

Secure the base to the mounting surface using two or three screws (sold separately). If a centering tool is used, slip it over the shaft and into the center hole of the base. Tighten the mounting screws and then remove the centering tool.

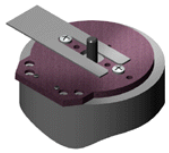

2. Spacer Installation

Place the spacer tool around the shaft, flat on the base.

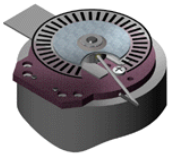

3. Hub/Disk Assembly Installation

Slip the hub over the shaft until it bottoms out against the spacer tool. Tighten the set screw with the hex wrench provided while pressing down on the hub. Remove the spacer tool.

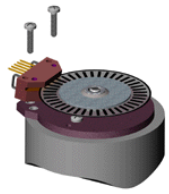

4. Encoder Module Installation

Orientate the module with the connector pins toward the top. Slide the module from front to back, being careful not to damage the disk. Stop when the two alignment pins on the base fit into the holes of the module. Secure with two 4-40 1/2" pan head screws (supplied).

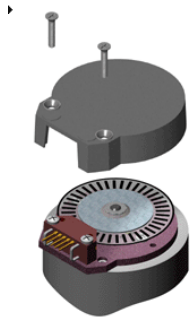

5. Cover Installation

Place the cover over the assembly and secure with the two 4-40 5/8" flat head screws provided.

Accessories

Centering Tools

* May need to order separately, only included with **PKG3**-packaging option.

Part #: CTOOL - (Shaft Diameter)

Description: This reusable tool provides a simple method for accurately centering the E3 base onto the shaft in order to promote concentricity and thus, higher accuracy. It is recommended for the following situations:

- When using mounting screws smaller than 4-40.
- When the position of the mounting holes is in question.
- When using the 3-hole mounting pattern.
- When using the T-option transfer adhesive.

Instructions: When mounting encoder base, slide centering tool down shaft until it slips into centering hole of encoder base. Tighten mounting screws, then remove centering tool.

Hex Tools

* May need to order separately, see below for more information.

Part #: HEXD-050

Description: Hex driver, .050" flat-to-flat for 3-48 or 4-48 set screws. Only included with **default** or **PKG1**-packaging options.

Part #: HEXW-050

Description: Hex wrench, .050" flat-to-flat for 3-48 or 4-48 set screws. Only included with **PKG2** or **PKG3**-packaging options.

Spacer Tools

* May need to order separately, see below for more information.

Part #: SPACER-265

Description: For shafts <=.394".

Rev. 120130070900

Part #: SPACER-260

Description: For shaft sizes 12MM or 1/2 IN.

Part #: SPACER-555

Description: For shafts >=.551".

Screws

* For **base mounting** only, screws for mounting the housing to the base are already included.

Part #: SCREW-080-250-PH

Description: Pan Head, Cross Drive 0-80 UNF x 1/4"

Quantity Required for Mounting: 3 per encoder

Part #: SCREW-256-250-PH

Description: Pan Head, Cross Drive 2-56 UNC x 1/4"

Quantity Required for Mounting: 2 per encoder

Part #: SCREW-440-250-PH

Description: Pan Head, Cross Drive 4-40 UNC x 1/4"

Quantity Required for Mounting: 2 per encoder

Rev. 120130070900

E3 Optical Kit Encoder

RoHS COMPLIANT

Ordering Information

E3 - [ ] - [ ] - [ ] - [ ] - [ ] - [ ]

Rev. 120130070900

E3 Optical Kit Encoder

RoHS COMPLIANT

CPR	Bore	Index	Cover	Base	Packaging
64	079 = *2mm*	NE =*No Index, EM1 Compatible*	D =*Default*	D =*Default*	B =*Encoder components packaged in bulk. One spacer tool and one hex driver per 100 encoders*
100	118 = *3mm*	IE =*Index, EM1 Compatible*	E =*Cover Extension*	3 =*0.125" diam. for five base mounting holes*	1 =*Each encoder packaged individually. One spacer tool and one hex driver per 100 encoders.*
200	125 =*1/8"*		H =*Hole in Cover*	M =*4-hole mounting adapter plate*	2 =*Each encoder packaged individually with one spacer tool and one hex wrench per encoder.*
400	156 = *5/32"*			T =*Transfer adhesive*	3 =*Each encoder packaged individually with one spacer tool, one hex wrench, and one centering tool per encoder.*
500	157 = *4mm*				
512	188 = *3/16"*				
1000	197 = *5mm*				
1024	236 = *6mm*				
1800	250 =*1/4"*				
2000	313 = *5/16"*				
2048	315 = *8mm*				
2500	375 =*3/8"*				
	394 = *10mm*				
	472 = *12mm*				
	500 =*1/2"*				
	551 = *14mm*				
	625 =*5/8"*				
	750 =*3/4"*				
	787 = *20mm*				
	875 =*7/8"*				
	984 = *25mm*				
	1000 =*1"*				

Rev. 120130070900

RoHS COMPLIANT

Rules

- Index must be equal to NE when CPR is equal to 64
- Base must be something other than 3 when Bore is greater than or equal to 472
- Cover must be something other than E when Bore is greater than 394

Notes

- US Digital warrants its products against defects in materials and workmanship for two years. See complete warranty for details.

Rev. 120130070900

PEWATRON
a member of the Angst + Pfister Group

We are here for you. Addresses and Contacts

Sales Switzerland

Postcode 3000 – 9999
Liechtenstein

Matthias Rüegg
Ruhbergstrasse 32
CH-9230 Flawil

Phone + 41 44 877 35 18
Mobile + 41 76 491 66 66
Fax + 41 44 877 35 19

matthias.rueegg@pewatron.com

Postcode 1000 – 2999

Raffael Favaretto
Route d'Oron 124
CH-1673 Promasens

Phone + 41 44 877 35 22
Mobile + 41 76 444 63 14
Fax + 41 44 877 35 23

raffael.favaretto@pewatron.com

Sales Germany

Postcode 60000 – 79999

Dieter Hirthe
Mühlweg 23
D-71554 Weissach i.T.

Phone + 49 719 149 60 58
Mobile + 49 163 762 74 30
Fax + 49 719 193 31 88

dieter.hirthe@pewatron.com

Postcode 10000 – 59999
Postcode 80000 – 99999

Kurt Stritzelberger
Neumarkter Str. 86a
D-81673 Munich

Phone + 49 89 260 38 47
Mobile + 49 171 803 41 35
Fax + 49 89 43 10 91 91

kurt.stritzelberger@pewatron.com

Key Accounts
Aerospace and Defence

Claus Wübbena
Vogelkamp 26
D-26655 Westerstede

Phone + 49 4488 5204 614
Mobile + 49 173 9700 691
Fax + 49 4488 5204 616

claus.wuebbena@pewatron.com

Sales Austria

Kurt Stritzelberger
Neumarkter Str. 86a
D-81673 Munich

Phone + 49 89 260 38 47
Mobile + 49 17 18 03 41 35
Fax + 49 89 43 10 91 91

kurt.stritzelberger@pewatron.com

Sales Other Countries / Product Management

Sensors

Physical Sensors
Data Acquisition

Peter Felder
Phone + 41 44 877 35 05
peter.felder@pewatron.com

Geometrical Sensors

Eric Letsch
Phone + 41 44 877 35 14
eric.letsch@pewatron.com

Power Supplies

DC-DC Converters
Switching Power Supplies
DC-AC Inverters

Sebastiano Leggio
Phone + 41 44 877 35 06
sebastiano.leggio@pewatron.com

E-Components

Current Sensors
Man Machine Interface
Measurement Probes

Sebastiano Leggio
Phone + 41 44 877 35 06
sebastiano.leggio@pewatron.com

PEWATRON AG
Thurgauerstrasse 66
CH-8052 Zurich

Phone + 41 44 877 35 00
Fax + 41 44 877 35 25

www.pewatron.com
info@pewatron.com