HD25 Industrial Rugged Metal Optical Encoder

Description

The HD25 is a rugged optical incremental shaft encoder designed for heavy-duty industrial applications. The housing, machined from a solid billet aluminum block and finished with clear anodizing, conforms to the industrial standard size 25 package. Size 25 encoders are widely used and are considered to be the backbone of feedback devices found in factory automation and industrial applications. The HD25 will drop directly into existing applications to provide a superior solution at a competitive cost. The HD25 is a factory stock product with little or no lead-time.

Typical applications include:

- Automation, robotics, motion control, elevator controls, machine tools, food processing, X-Y tables and conveyors.
- Lathes, grinders, CNC machine tools, high performance servos, test equipment, packaging machines, balance machines and cutting machines.
- Web processing, rotary tables, transfer machines, stacker cranes, press controls, printing presses and pump controls.
- Oil field equipment, saw mill machinery and construction machinery.

Our absolute encoders may be used in many stand alone applications that do not require a PC interface. For these applications we provide detailed communications protocols for all of our absolute products (see the SEI Absolute Encoder Communications Protocol page).

Features

- NEMA size 25 package
- Anodized milled aluminum housing with O-ring housing seal
- LED and phased array wide-gap monolithic encoder technology
- Tracks from 0 to 100,000 cycles/sec
- 64 to 2500 cycles per revolution (CPR)
- 400 to 10,000 pulses per revolution (PPR)
- 2 channel quadrature squarewave outputs
- Single-ended or differential outputs
- Optional index (3rd channel)
- ABEC 5 bearings

Mechanical Drawing

Rev. 120130064058

HD25 Industrial Rugged Metal Optical Encoder

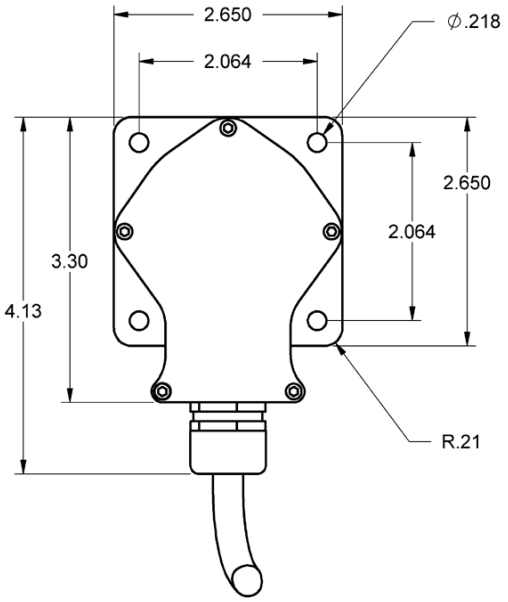

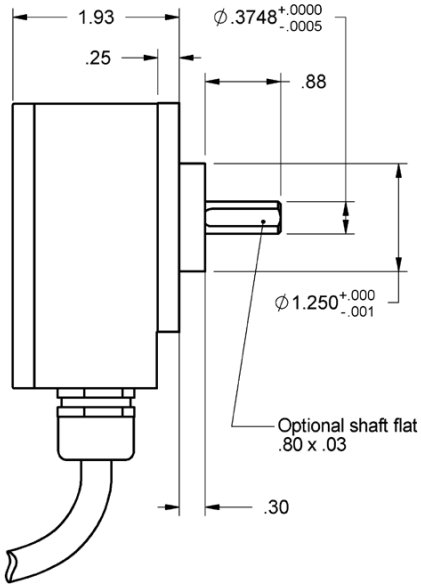

Mechanical

Size	NEMA size 25
Housing and Cover Material	Anodized aluminum
Weight	17 oz.
Shaft Material	Stainless steel
Shaft Diameter	0.3748" +0.0000" -0.0003"
Shaft Optional Flat Size	.08 in. long x .03 in. deep
Shaft Runout	≤ .0003 T.I.R.
Shaft Torque With Shaft Seal	3.5 in-oz. typical
Shaft Torque Without Shaft Seal	Less than 1/2 in-oz.
Max Axial Load	40 lbs.
Max Radial Load	35 lbs.
Bearings	ABEC 5 440 stainless steel with light preload
Bearing Life @ 4 Pound Load	2.3 x 10^9 revolutions
Moment of Inertia	2.8 x 10^-4 oz-in-sec²
Max Acceleration	1 x 10^5 rev / sec²
Max RPM With Shaft Seal	6000 RPM
Max RPM Without Shaft Seal	6 x 10^6 / CPR (limited by electronics)

Rev. 120130064058

Electrical

AB Output

Parameter	Min.	Max.	Units	Notes
Supply Voltage (HV Version)	9.5	32	Volts	
Supply Voltage (LV Version)	-	5.5	Volts	
Supply Current	-	110	mA	No load
Output High Voltage	2.4	-	Volts	
Output Low Voltage	-	0.8	Volts	
Output Source Current	-	30	mA	
Frequency Response	-	100	kHz	

Electrical Notes

AB Output:

Output Code	Incremental
Output Format	2 channels in quadrature
Index Width	1/4 cycle wide
Output IC	ET7272
Protection Level	Output short to ground
Illumination	LED

Environmental

Low Voltage Operating Temperature	-40 C to 100 C
High Voltage Operating Temperature	-40 C to 85 C
Storage Temperature	-40 C to 100 C
Shock	60 G's for 11 mSec
Vibration (5 to 2kHz)	20 Hz to 2000 Hz @ 20G's
Humidity With Shaft Seal	100% condensing (NEMA IP65)
Humidity Without Shaft Seal	98% non-condensing

Encoder Characteristics

- Specifications apply over entire operating temperature range.
- Values are for the worst error over a full rotation.

For Resolutions 2000 & 2048 with Index Only

HD25 Industrial Rugged Metal Optical Encoder

Parameter	Symbol	Min.	Typ.	Max.	Units
Cycle Error	-	-	3.0	7.5	° e
Symmetry	-	130	180	230	° e
Quadrature	-	40	90	140	° e
Index Pulse Width	Po	40	90	140	° e
Channel I Rise after Channel B or Channel A Fall	t1	10	450	1500	ns
Channel I Fall after Channel A or Channel B Rise	t2	10	250	1500	ns

For All Remaining Resolutions

Parameter	Symbol	Min.	Typ.	Max.	Units
Cycle Error	-	-	3.0	5.5	° e
Symmetry	-	150	180	210	° e
Quadrature	-	60	90	120	° e
Index Pulse Width	Po	60	90	120	° e
Channel I Rise after Channel B or Channel A Fall	t1	-300	100	250	ns
Channel I Fall after Channel A or Channel B Rise	t2	70	150	1000	ns

AB Output Timing Diagram

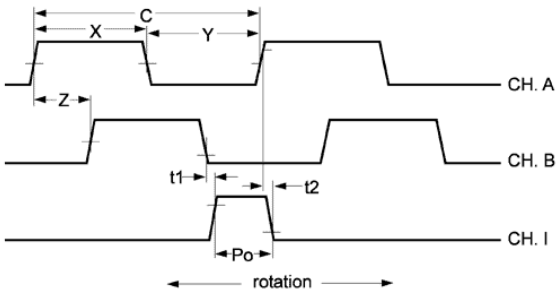

- **CPR (N):** The number of Cycles Per Revolution.
- **One Shaft Rotation:** 360 mechanical degrees, N cycles.
- **One Electrical Degree (° e):** 1/360th of one cycle.
- **One Cycle (C):** 360 electrical degrees (° e). Each cycle can be decoded into 1 or 4 codes, referred to as X1 or X4 resolution multiplication.
- **Symmetry:** A measure of the relationship between (X) and (Y) in electrical degrees, nominally 180 ° e.
- **Quadrature (Z):** The phase lag or lead between channels A and B in electrical degrees, nominally 90 ° e.
- **Index (CH I.):** The index output goes high once per revolution, coincident with the low states of channels A and B, nominally 1/4 of one cycle (90 ° e).

Rev. 120130064058

HD25 Industrial Rugged Metal Optical Encoder

- **Position Error:** The difference between the actual shaft position and the position indicated by the encoder cycle count.
- **Cycle Error:** An indication of cycle uniformity. The difference between an observed shaft angle which gives rise to one electrical cycle, and the nominal angular increment of 1/N of a revolution.

7-pin Connector Pin-out & Cable Wire

Pin	Quad. (AB)	Low Temp. (CA7)
A	A channel	White w/ Blue stripe
B	B channel	White w/ Brown stripe
C*	Index	White w/ Orange stripe
D	+VDC	Orange w/ White stripe
E	NC	Brown w/ White stripe
F	Common	Blue w/ White stripe
G	Case ground	Green w/ White stripe

* Only available when Index channel is specified.

The 7-pin Connector

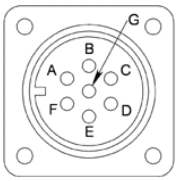

10-pin Connector Pin-out & Cable Wire

Pin	Quad. (AB)	Low Temp. (CA7)
A	A+ channel	Blue w/ White stripe
B	B+ channel	Brown w/ White stripe
C*	Index+	Orange w/ White stripe
D	+VDC	Green w/ White stripe
E	NC	Gray w/ White stripe
F	Common	White w/ Gray stripe
G	Case ground	White w/ Green stripe
H	A- channel	White w/ Blue stripe
I	B- channel	White w/ Brown stripe
J*	Index-	White w/ Orange stripe

* Only available when Index channel is specified.

Rev. 120130064058

HD25 Industrial Rugged Metal Optical Encoder

The 10-pin Connector

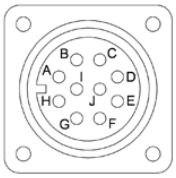

Rev. 120130064058

HD25 Industrial Rugged Metal Optical Encoder

Ordering Information

HD25 - [ ] - [ ] - [ ] - [ ] - [ ] - [ ]

CPR	Flat	Seal	Voltage	Index	Output
64	N =*Non-Flat*	N =*Non-Sealed*	L =*Low*	NE =*No Index, EM1 Compatible*	S =*Single-ended*
100	F =*Flat*	S =*Sealed*	H =*High*	IE =*Index (3rd Channel), EM1 Compatible*	D =*Differential*
200					
400					
500					
512					
1000					
1024					
1800					
2000					
2048					
2500					

Rules

- Index must be equal to NE when CPR is equal to 64

Notes

- Cables and connectors are not included and must be ordered separately.
- US Digital warrants its products against defects in materials and workmanship for two years. See complete warranty for details.

Rev. 120130064058

PEWATRON
a member of the Angst + Pfister Group

We are here for you. Addresses and Contacts

Sales Switzerland

Postcode 3000 – 9999
Liechtenstein

Matthias Rüegg
Ruhbergstrasse 32
CH-9230 Flawil

Phone + 41 44 877 35 18
Mobile + 41 76 491 66 66
Fax + 41 44 877 35 19

matthias.rueegg@pewatron.com

Postcode 1000 – 2999

Raffael Favaretto
Route d'Oron 124
CH-1673 Promasens

Phone + 41 44 877 35 22
Mobile + 41 76 444 63 14
Fax + 41 44 877 35 23

raffael.favaretto@pewatron.com

Sales Germany

Postcode 60000 – 79999

Dieter Hirthe
Mühlweg 23
D-71554 Weissach i.T.

Phone + 49 719 149 60 58
Mobile + 49 163 762 74 30
Fax + 49 719 193 31 88

dieter.hirthe@pewatron.com

Postcode 10000 – 59999
Postcode 80000 – 99999

Kurt Stritzelberger
Neumarkter Str. 86a
D-81673 Munich

Phone + 49 89 260 38 47
Mobile + 49 171 803 41 35
Fax + 49 89 43 10 91 91

kurt.stritzelberger@pewatron.com

Key Accounts
Aerospace and Defence

Claus Wübbena
Vogelkamp 26
D-26655 Westerstede

Phone + 49 4488 5204 614
Mobile + 49 173 9700 691
Fax + 49 4488 5204 616

claus.wuebbena@pewatron.com

Sales Austria

Kurt Stritzelberger
Neumarkter Str. 86a
D-81673 Munich

Phone + 49 89 260 38 47
Mobile + 49 17 18 03 41 35
Fax + 49 89 43 10 91 91

kurt.stritzelberger@pewatron.com

Sales Other Countries / Product Management

Sensors

Physical Sensors
Data Acquisition

Peter Felder
Phone + 41 44 877 35 05
peter.felder@pewatron.com

Geometrical Sensors

Eric Letsch
Phone + 41 44 877 35 14
eric.letsch@pewatron.com

Power Supplies

DC-DC Converters
Switching Power Supplies
DC-AC Inverters

Sebastiano Leggio
Phone + 41 44 877 35 06
sebastiano.leggio@pewatron.com

E-Components

Current Sensors
Man Machine Interface
Measurement Probes

Sebastiano Leggio
Phone + 41 44 877 35 06
sebastiano.leggio@pewatron.com

PEWATRON AG
Thurgauerstrasse 66
CH-8052 Zurich

Phone + 41 44 877 35 00
Fax + 41 44 877 35 25

www.pewatron.com
info@pewatron.com