S2 Optical Kit Encoder

RoHS COMPLIANT

Description

The S2 series high resolution optical shaft encoder is a non-contacting rotary to digital converter. Useful for position feedback or manual interface, the encoder converts real-time shaft angle, speed, and direction into TTL-compatible quadrature outputs with or without index. The encoder utilizes an unbreakable mylar disk, metal shaft and bushing, LED light source, and monolithic electronics. It operates from a single +5VDC supply.

The S2 is our first generation ball bearing optical shaft encoder and is available for those customers who have designed it into their products; however, the S6 is recommended for new designs in place of the S2.

The S2 is normally designed for applications of 6 feet or less. For longer cable lengths, adding a PC4 / PC5 differential line driver is recommended.

Three shaft torque versions are available. The standard torque version has a sleeve bushing lubricated with a viscous motion control gel to provide torque and feel that is ideal for front panel human interface applications.

The no torque added option has a sleeve bushing and a low viscosity lubricant (that does not intentionally add torque) for low RPM applications where a small amount of torque is acceptable.

The ball bearing version uses miniature precision ball bearings that are suitable for high speed and ultra low torque applications.

Connection to the S2 series encoder is made through a 5-pin standard connector (sold separately). The mating connectors are available from US Digital with several cable options and lengths.

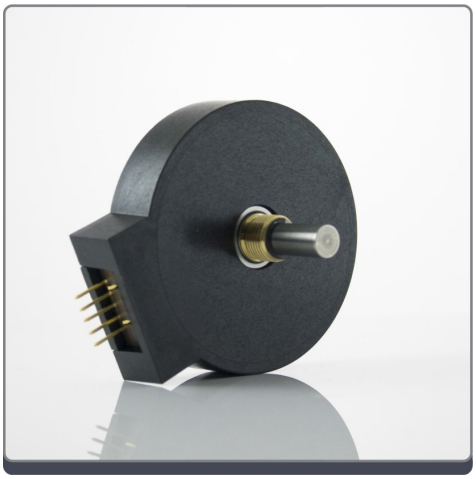

Features

- Small size
- Low cost
- 2-channel quadrature, TTL square wave outputs
- 3rd channel index option
- Tracks from 0 to 100,000 cycles/sec
- Ball bearing option tracks to 10,000 RPM
- -40 to +100C operating temperature
- Single +5V supply

Mechanical Drawing

Rev. 120130070344

S2 Optical Kit Encoder

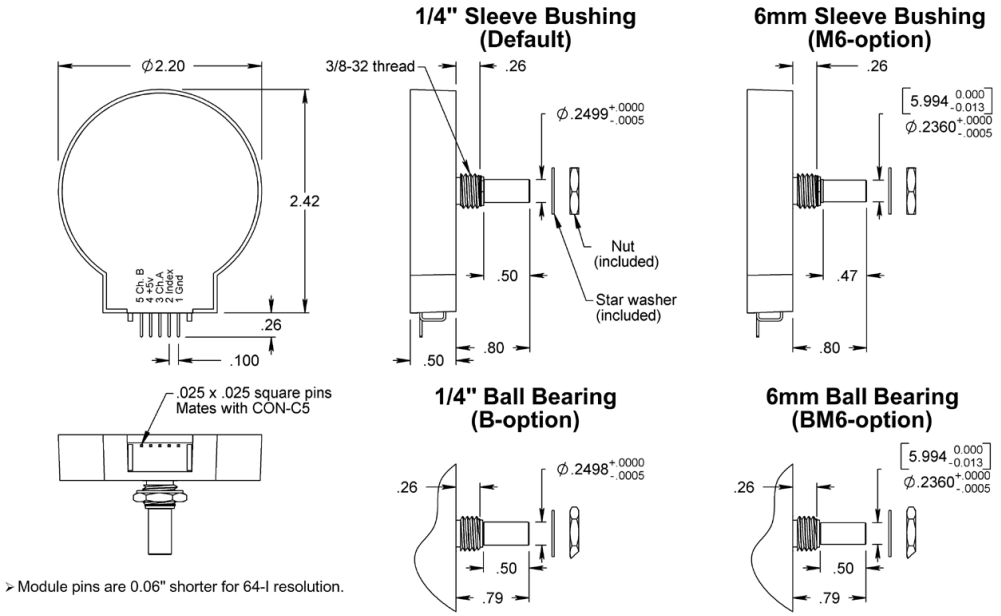

➢ Module pins are 0.06" shorter for 64-I resolution.

Mechanical

Parameter	Sleeve Bushing	Ball Bearing
Acceleration	250,000 rad/sec²	250,000 rad/sec²
Vibration	5 Hz to 2 kHz, 20 G	5 Hz to 2 kHz, 20 G
Shaft Speed	100 RPM max. continuous	10,000 RPM max. continuous
Shaft Rotation	Continuous and reversible	-
Shaft Torque	0.5 ±0.2 in. oz. 0.3 in. oz. max. (**N**-option)	0.05 in. oz. max.
Shaft Loading	2 lbs. max. dynamic 20 lbs. max. static	1 lb. max.
Bearing Life	> 1,000,000 revolutions	$L_{10} = (19.3/F_r)^3$ * Where L_{10} = bearing life in millions of revs, and F_r = radial shaft loading in pounds
Weight	1.28 oz.	1.28 oz.
Shaft Runout	0.0015 T.I.R. max.	0.0015 T.I.R. max.

* only valid with negligible axial shaft loading.

Phase Relationship

B leads A for clockwise shaft rotation, and A leads B for counterclockwise rotation viewed from the shaft side of the encoder (*see the EM1 / HEDS page*

Rev. 120130070344

).

Electrical

- Specifications apply over entire operating temperature range.
- Typical values are specified at Vcc = 5.0Vdc and 25 ° C.
- For complete details see the EM1 and HEDS product pages.

	Supply Current	Output voltage low	Output voltage high	
Resolution	Typ / Max	Max	Min	Based on
1000, 1024 CPR, non-index	17 / 40 mA	0.4 volts @ 3.2mA	2.4 volts @ -200uA	Low-res HEDS
2000, 2048 CPR, non-index	57 / 85 mA	0.5 volts @ 8mA	2.4 volts @ -40uA	High-res HEDS
64 CPR, with index	27 / 30 mA	0.5 volts @ 8mA	2.0 volts @ -8mA	EM1
1000, 1024 CPR, with index	57 / 85 mA	0.5 volts @ 8mA	2.4 volts @ -40uA	High-res HEDS
2000, 2048 CPR, with index	57 / 85 mA	0.5 volts @ 8mA	2.4 volts @ -40uA	High-res HEDS
2500 CPR, with index	55 / 57 mA	0.5 volts @ 8mA	2.0 volts @ -8mA	EM1

Pin-out

Pin	Description
1	Ground
2	Index
3	A channel
4	+5VDC power
5	B channel

Rev. 120130070344

S2 Optical Kit Encoder

RoHS COMPLIANT

Ordering Information

S2 - [ ] - [ ] - [ ] - [ ] - [ ]

CPR	Shaft	Index	Torque	Housing
64	236 =*6mm dia. sleeve bushing (standard torque)*	NE =*No Index, EM1 Compatible*	D =*Default*	D =*Default*
1000	250 =*1/4"*	IE =*Index, EM1 Compatible*	B =*Ball Bearing*	S =*Sealed Housing*
1024			N =*No Torque Added*	
2000				
2048				
2500				

Rules

- Index must be equal to NE when CPR is equal to 64

Notes

- Cables and connectors are not included and must be ordered separately.
- For ordering information please see the Compatible Cables / Connectors section above.
- US Digital warrants its products against defects in materials and workmanship for two years. See complete warranty for details.

Rev. 120130070344

PEWATRON
a member of the Angst + Pfister Group

We are here for you. Addresses and Contacts

Sales Switzerland

Postcode 3000 – 9999
Liechtenstein

Matthias Rüegg
Ruhbergstrasse 32
CH-9230 Flawil

Phone + 41 44 877 35 18
Mobile + 41 76 491 66 66
Fax + 41 44 877 35 19

matthias.rueegg@pewatron.com

Postcode 1000 – 2999

Raffael Favaretto
Route d'Oron 124
CH-1673 Promasens

Phone + 41 44 877 35 22
Mobile + 41 76 444 63 14
Fax + 41 44 877 35 23

raffael.favaretto@pewatron.com

Sales Germany

Postcode 60000 – 79999

Dieter Hirthe
Mühlweg 23
D-71554 Weissach i.T.

Phone + 49 719 149 60 58
Mobile + 49 163 762 74 30
Fax + 49 719 193 31 88

dieter.hirthe@pewatron.com

Postcode 10000 – 59999
Postcode 80000 – 99999

Kurt Stritzelberger
Neumarkter Str. 86a
D-81673 Munich

Phone + 49 89 260 38 47
Mobile + 49 171 803 41 35
Fax + 49 89 43 10 91 91

kurt.stritzelberger@pewatron.com

Key Accounts
Aerospace and Defence

Claus Wübbena
Vogelkamp 26
D-26655 Westerstede

Phone + 49 4488 5204 614
Mobile + 49 173 9700 691
Fax + 49 4488 5204 616

claus.wuebbena@pewatron.com

Sales Austria

Kurt Stritzelberger
Neumarkter Str. 86a
D-81673 Munich

Phone + 49 89 260 38 47
Mobile + 49 17 18 03 41 35
Fax + 49 89 43 10 91 91

kurt.stritzelberger@pewatron.com

Sales Other Countries / Product Management

Sensors

Physical Sensors
Data Acquisition

Peter Felder
Phone + 41 44 877 35 05
peter.felder@pewatron.com

Geometrical Sensors

Eric Letsch
Phone + 41 44 877 35 14
eric.letsch@pewatron.com

Power Supplies

DC-DC Converters
Switching Power Supplies
DC-AC Inverters

Sebastiano Leggio
Phone + 41 44 877 35 06
sebastiano.leggio@pewatron.com

E-Components

Current Sensors
Man Machine Interface
Measurement Probes

Sebastiano Leggio
Phone + 41 44 877 35 06
sebastiano.leggio@pewatron.com

PEWATRON AG
Thurgauerstrasse 66
CH-8052 Zurich

Phone + 41 44 877 35 00
Fax + 41 44 877 35 25

www.pewatron.com
info@pewatron.com