HB5M Hollow Bore Optical Encoder

RoHS COMPLIANT

Description

The HB5M is a hollow bore (hollow shaft / thru-bore) optical encoder with a machined aluminum enclosure and a clear anodized protective finish. The HB5M optical incremental encoder is designed to easily mount to an existing shaft to provide digital feedback information for any motion control application. The HB6M has a compliant mounting method that makes it more tolerant of radial and axial shaft runout than a standard kit encoder.

Typical applications include servo motor feedback, web process control, robotics, flux vector feedback, high power motors, textile machines and elevator controls.

The HB5M bearing style encoder features a hollow bore that accepts shaft diameters of 5mm to 8mm in diameter. The encoder slips over the shaft and is locked into place with two 4-48 set screws. A flexible anti-rotation tether compensates for shaft run out of up to 0.030" axial and 0.010" TIR. The flexible tether provides mounting for two 4-40 machine screws on a 1.812" bolt circle.

The HB5M housing comes standard with a closed cover to limit particle ingress, or an optional hole in the body to allow a shaft to pass completely through the encoder.

The mating connector is polarized and latches into the encoder. Depressing the latch tab allows the connector to be unplugged. Mating connector assemblies are available from US Digital stock. Custom cables are also readily available (see the Cables / Connectors page).

The differential version has an internal differential line driver (26C31) attached to the encoder module that can source and sink 20mA at TTL levels. The cable that connects to this encoder should have 3 twisted pairs for the data channels plus power and ground. Group each pair of differential signals. The recommended receiver is industry standard 26C32. Maximum noise immunity is achieved when the differential receiver is terminated with a 110 Ohms resistor in series with a 0.0047f capacitor placed across each differential pair. The capacitor simply conserves power; otherwise power consumption would increase by 20mA per pair, or 60mA for 3 pairs.

Features

- Hollow bore (hollow shaft / thru-bore) bearing design
- Rugged anodized aluminum housing
- Heavy duty ball bearings track up to 6,000 RPM
- Positive finger-latching polarized connector
- 2-channel quadrature, TTL squarewave outputs
- 3rd channel index option
- Differential line driver output option
- Tracks from 0 to 100,000 cycles/sec
- 32 to 1250 cycles per revolution (CPR)
- 124 to 5000 pulses per revolution (PPR)

Mechanical Drawing

Rev. 120130065102

HB5M Hollow Bore Optical Encoder

RoHS COMPLIANT

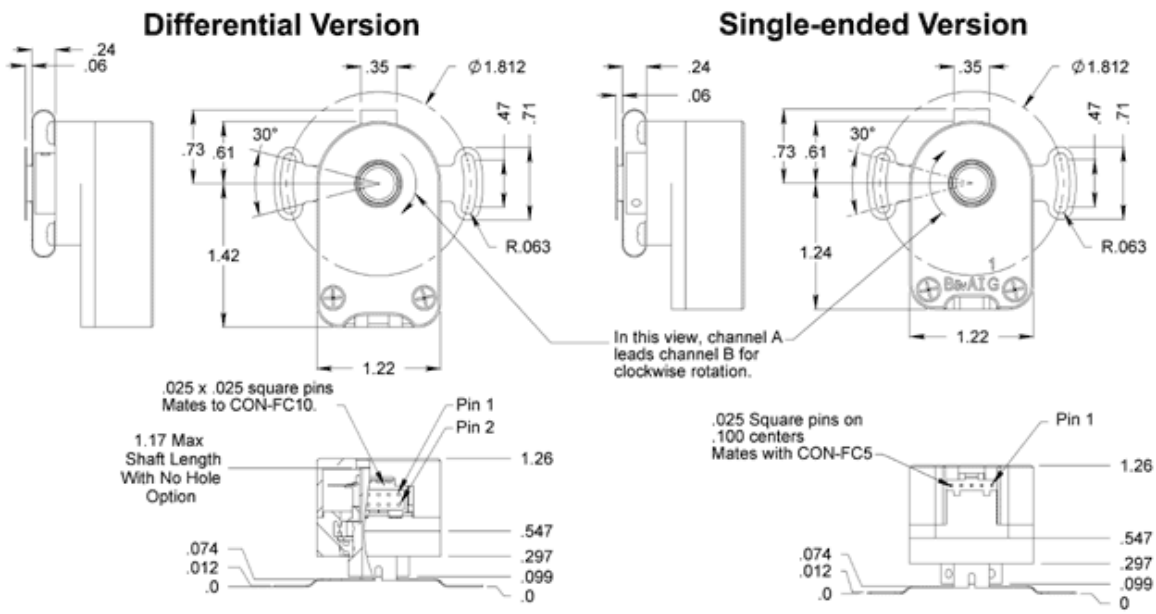

Mechanical

Shaft Speed	6,000 RPM max. continuous
Acceleration	$1x10^5$ rad/sec^2
Starting Torque	0.20 oz-in typical
Shaft Loading	2 lbs. max.
Weight	2.84 oz.
Shaft Runout	0.030" axial 0.010 TIR
Shaft Insertion Depth	1.0" max. with default cover. No limit with H-option cover.
Moment of Inertia	$1.29x10^{-4}$ oz-in-sec^2
Vibration	5Hz to 2kHz, 20G
Shock	50G @ 11mS
Operating Temperature	-20C to 100C

Phase Relationship

A leads B in a clockwise shaft rotation, and B leads A in counterclockwise shaft rotation viewed from the rear side (opposite flexible mount) of the encoder.

Rev. 120130065102

HB5M Hollow Bore Optical Encoder

RoHS COMPLIANT

Single-ended Electrical

- Specifications apply over entire operating temperature range.
- Typical values are specified at Vcc = 5.0Vdc and 25 ° C.
- For complete details see the EM1 and HEDS product pages.

	Supply Current	Output voltage low	Output voltage high	
Resolution	Typ / Max	Max	Min	Based on
50,96, 100, 110, 120, 192, 200, 250, 256, 360, 400, 500, 512, 540 CPR, non-index	17 / 40 mA	0.4 volts @ 3.2mA	2.4 volts @ -200uA	Low-res HEDS
1000, 1016, 1024 CPR, non-index	57 / 85 mA	0.5 volts @ 8mA	2.4 volts @ -40uA	High-res HEDS
32 CPR, with index	27 / 30 mA	0.5 volts @ 8mA	2.0 volts @ -8mA	EM1
50,96, 100, 192, 200, 250, 256, 360, 400, 500, 512 CPR, with index	57 / 85 mA	0.5 volts @ 8mA	2.4 volts @ -40uA	High-res HEDS
720, 900, 1000, 1024, 1250 CPR, with index	55 / 57 mA	0.5 volts @ 8mA	2.0 volts @ -8mA	EM1

Differential Electrical

Specification	Min.	Typ.	Max.	Units	Notes
Supply	4.5	5.0	5.5	Volts	
Current Consumption - Index: 32 CPR	-	28	35	mA	No load
Current Consumption - Index: 720, 900, 1000, 1024, 1250 CPR	-	56	59	mA	No load
Current Consumption - Index: All Other Resolutions	-	58	88	mA	No load
Current Consumption - Non-index: <1000 CPR	-	18	43	mA	No load
Current Consumption - Non-index: >=1000	-	58	88	mA	No load
Output Voltage - Sourcing to +5	2.4	3.4	-	Volts	@ -20mA
Output Voltage - Sinking to Ground	-	0.2	0.4	Volts	@ 20mA

Pin-outs

5-pin Single-ended:

Pin	Description
1	Ground
2	Index
3	A channel
4	+5VDC power
5	B channel

Rev. 120130065102

HB5M Hollow Bore Optical Encoder

RoHS COMPLIANT

10-pin Differential

Pin	Description
1	Ground
2	Ground
3	Index-
4	Index+
5	A- channel
6	A+ channel
7	+5VDC power
8	+5VDC power
9	B- channel
10	B+ channel

Rev. 120130065102

HB5M Hollow Bore Optical Encoder

RoHS COMPLIANT

Ordering Information

HB5M - [ ] - [ ] - [ ] - [ ] - [ ]

CPR	Bore	Index	Output	Housing
32	197 =*5mm*	NE =*No Index, EM1 Compatible*	S =*Single-ended*	D =*Default*
50	236 =*6mm*	IE =*Index, EM1 Compatible*	D =*Differential*	H =*Hole in Housing*
96	250 =*1/4"*			
100	313 =*5/16"*			
192	315 =*8mm*			
200				
250				
256				
360				
400				
500				
512				
540				
720				
900				
1000				
1024				
1250				

Rules

- Index must be equal to NE when CPR is equal to 32

Notes

- Cables and connectors are not included and must be ordered separately.
- For ordering information please see the Compatible Cables / Connectors section above.
- US Digital warrants its products against defects in materials and workmanship for two years. See complete warranty for details.

Rev. 120130065102

PEWATRON
a member of the Angst + Pfister Group

We are here for you. Addresses and Contacts

Sales Switzerland

Postcode 3000 – 9999
Liechtenstein

Matthias Rüegg
Ruhbergstrasse 32
CH-9230 Flawil

Phone + 41 44 877 35 18
Mobile + 41 76 491 66 66
Fax + 41 44 877 35 19

matthias.rueegg@pewatron.com

Postcode 1000 – 2999

Raffael Favaretto
Route d'Oron 124
CH-1673 Promasens

Phone + 41 44 877 35 22
Mobile + 41 76 444 63 14
Fax + 41 44 877 35 23

raffael.favaretto@pewatron.com

Sales Germany

Postcode 60000 – 79999

Dieter Hirthe
Mühlweg 23
D-71554 Weissach i.T.

Phone + 49 719 149 60 58
Mobile + 49 163 762 74 30
Fax + 49 719 193 31 88

dieter.hirthe@pewatron.com

Postcode 10000 – 59999
Postcode 80000 – 99999

Kurt Stritzelberger
Neumarkter Str. 86a
D-81673 Munich

Phone + 49 89 260 38 47
Mobile + 49 171 803 41 35
Fax + 49 89 43 10 91 91

kurt.stritzelberger@pewatron.com

Key Accounts
Aerospace and Defence

Claus Wübbena
Vogelkamp 26
D-26655 Westerstede

Phone + 49 4488 5204 614
Mobile + 49 173 9700 691
Fax + 49 4488 5204 616

claus.wuebbena@pewatron.com

Sales Austria

Kurt Stritzelberger
Neumarkter Str. 86a
D-81673 Munich

Phone + 49 89 260 38 47
Mobile + 49 17 18 03 41 35
Fax + 49 89 43 10 91 91

kurt.stritzelberger@pewatron.com

Sales Other Countries / Product Management

Sensors

Physical Sensors
Data Acquisition

Peter Felder
Phone + 41 44 877 35 05
peter.felder@pewatron.com

Geometrical Sensors

Eric Letsch
Phone + 41 44 877 35 14
eric.letsch@pewatron.com

Power Supplies

DC-DC Converters
Switching Power Supplies
DC-AC Inverters

Sebastiano Leggio
Phone + 41 44 877 35 06
sebastiano.leggio@pewatron.com

E-Components

Current Sensors
Man Machine Interface
Measurement Probes

Sebastiano Leggio
Phone + 41 44 877 35 06
sebastiano.leggio@pewatron.com

PEWATRON AG
Thurgauerstrasse 66
CH-8052 Zurich

Phone + 41 44 877 35 00
Fax + 41 44 877 35 25

www.pewatron.com
info@pewatron.com