NEMICON

HOLLOW TYPE

HES Model

Best Seller Hollow Shaft Encoder

- Wide Variation of Outputs (6) and Resolution (20~3600 P/R).

Model

HES - □□ - 2M □ - □□□ - □□□ - □ 0 0

Resolution

002	20P/R	05	500P/R
003	30P/R	0512	512P/R
0032	32P/R	06	600P/R
004	40P/R	08	800P/R
005	50P/R	09	900P/R
006	60P/R	10	1000P/R
01	100P/R	1024	1024P/R
0125	125P/R	12	1200P/R
02	200P/R	15	1500P/R
0250	250P/R	18	1800P/R
0256	256P/R	20	2000P/R
03	300P/R	2048	2048P/R
036	360P/R	25	2500P/R
04	400P/R	36	3600P/R

Hollow Shaft Diameter

- 800 : φ8
- 635 : φ6.35
- 600 : φ6
- 500 : φ5

Cable Length

- 050 : 500mm (Standard)
- 100 : 1000mm
- 300 : 3000mm

Output Mode

- No Indication : Other than D output
- No Indication : D output with LS
- C : D output with C-MOS

Output Mode

- No Indication : Voltage Output
- C : Open Collector Output
- HC : Open Collector Output / High Voltage
- HCP : PNP Mode Open Collector Output / High Voltage
- HT : Push-Pull Output / High Voltage
- D : Line Driver Output Low Power Consumption C-MOS Output Available

Signals — 2M : AB90° Phase Difference + Zero Signal

External Dimension

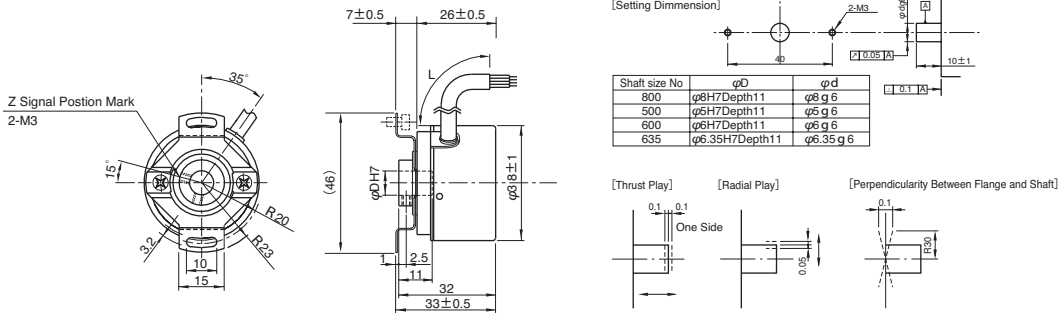

Circuit of Output Signal

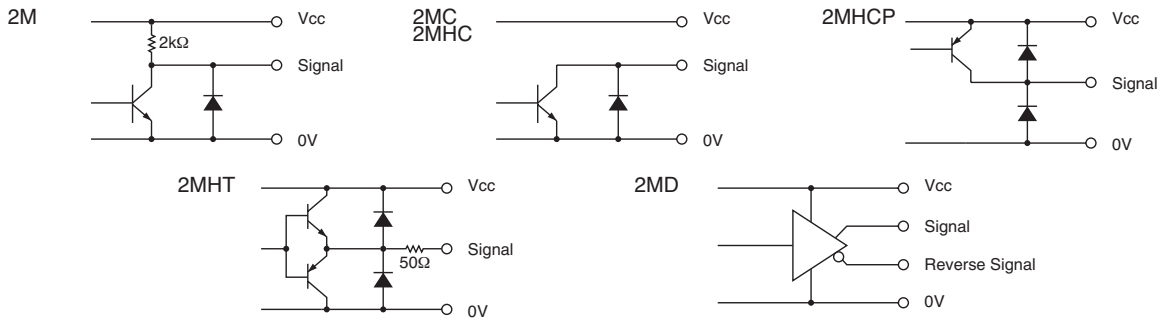

Supporting your great ideas
www.pewatron.com
PEWATRON
a member of the Angst + Pfister Group

Electrical Spec.

※1) at Maximum Output Current ※2) Maximum Source Current

TYPE		2 • 2M	2C•2MC	2HC•2MHC	2HCP•2MHCP	2HT•2MHT	2MD
Supply Voltage		DC4.5 ~ 13.2 V		DC10.8 ~ 26.4 V			DC4.75 ~ 5.25V C-MOS DC4.5 ~ 5.5V
Requirement		80 mA Max	60 mA Max		100 mA Max	60 mA Max	150 mA Max C-MOS60 mA Max
Output Voltage	"H"	Within –1 Power Volt	———		Within –1※2 Power Volt	Within –3 Power Volt	2.5 V or More
	"L"※1	0.5 V Max			———	3 V Max	0.5 V Max
Maximum Output Current		20 mA MAX				40 mA MAX	20 mA MAX
Rise & Fall Time		1 μs Max					200 ns Max
Maximum Frequency Response		200 kHz			50 kHz	200 kHz	
Withstanding Voltage of Output Tr.		———	50 V MAX.		———		

Wave Form.

CW → Rotating Toward Clockwise Viewed from an Arrow

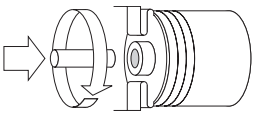

Rising point of A-Signal is always at one point while Z-Signal is at H-Level in CW.

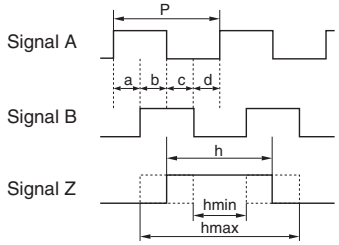

$$P = \frac{1}{1\text{Resolution}}$$

$$a, b, c, d = \frac{P}{4} \pm \frac{P}{8} \qquad \frac{P}{2} \leqq h \leqq \frac{3P}{2}$$

Wave Ratio (Duty); 50 ± 25 (%)

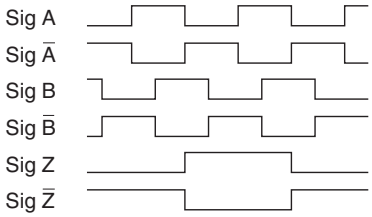

Electrical Connections

2M 2MC 2MHC 2MHCP 2MHT

Color of Lead Wire	Description
Red	Power Source
Black	0V Common
Green or Blue	Signal A
White	Signal B
Yellow	Signal Z
Shielding Braid	NC

2MD

Color of Lead Wire	Description	Color of Lead Wire	Description
Red	Power Source	White	Signal B
Black	0V Common	Gray	Signal B̄
Green	Signal A	Yellow	Signal Z
Blue	Signal Ā	Orange	Signal Z̄
Shielding Braid	NC		

Mechanical Spec.

Starting Torque		9.8×10^{-4}N • m Max
Angular Acceleration		1×10^{5} rad/s^2
Shaft Loading	Thrust axial	9.8N
	Radial	29.4N
Moment of Inertia		8×10^{-7}kg • m^2
Maximum RPM		6000r/min
Net Weight		120g Max

Environmental Spec.

Operating Temperature	–10˚C ~ +70˚C
Storage Temperature	– 30˚C ~ +80˚C
Humidity	RH 85% Max No Condensation
Vibration	10~55 Hz / 1.5mm 2 h
Shock	294m/s²,11ms X, Y, Z Each 3 times
Degree of Protection	IP50

PEWATRON
a member of the Angst + Pfister Group

We are here for you. Addresses and Contacts

Sales Switzerland

Postcode 3000 – 9999
Liechtenstein

Matthias Rüegg
Ruhbergstrasse 32
CH-9230 Flawil

Phone + 41 44 877 35 18
Mobile + 41 76 491 66 66
Fax + 41 44 877 35 19

matthias.rueegg@pewatron.com

Postcode 1000 – 2999

Raffael Favaretto
Route d'Oron 124
CH-1673 Promasens

Phone + 41 44 877 35 22
Mobile + 41 76 444 63 14
Fax + 41 44 877 35 23

raffael.favaretto@pewatron.com

Sales Germany

Postcode 60000 – 79999

Dieter Hirthe
Mühlweg 23
D-71554 Weissach i.T.

Phone + 49 719 149 60 58
Mobile + 49 163 762 74 30
Fax + 49 719 193 31 88

dieter.hirthe@pewatron.com

Postcode 10000 – 59999
Postcode 80000 – 99999

Kurt Stritzelberger
Neumarkter Str. 86a
D-81673 Munich

Phone + 49 89 260 38 47
Mobile + 49 171 803 41 35
Fax + 49 89 43 10 91 91

kurt.stritzelberger@pewatron.com

Key Accounts
Aerospace and Defence

Claus Wübbena
Vogelkamp 26
D-26655 Westerstede

Phone + 49 4488 5204 614
Mobile + 49 173 9700 691
Fax + 49 4488 5204 616

claus.wuebbena@pewatron.com

Sales Austria

Kurt Stritzelberger
Neumarkter Str. 86a
D-81673 Munich

Phone + 49 89 260 38 47
Mobile + 49 17 18 03 41 35
Fax + 49 89 43 10 91 91

kurt.stritzelberger@pewatron.com

Sales Other Countries / Product Management

Sensors

Physical Sensors
Data Acquisition

Peter Felder
Phone + 41 44 877 35 05
peter.felder@pewatron.com

Geometrical Sensors

Eric Letsch
Phone + 41 44 877 35 14
eric.letsch@pewatron.com

Power Supplies

DC-DC Converters
Switching Power Supplies
DC-AC Inverters

Sebastiano Leggio
Phone + 41 44 877 35 06
sebastiano.leggio@pewatron.com

E-Components

Current Sensors
Man Machine Interface
Measurement Probes

Sebastiano Leggio
Phone + 41 44 877 35 06
sebastiano.leggio@pewatron.com

PEWATRON AG
Thurgauerstrasse 66
CH-8052 Zurich

Phone + 41 44 877 35 00
Fax + 41 44 877 35 25

www.pewatron.com
info@pewatron.com