NEMICON

BUILT-IN TYPE

SBU Model

Large Size Model

- Low Profile Hollow Through Shaft With Max. Caliber φ50mm.

Model

SBU – 8192 – 6MD 24 – 500 – 00

Resolution

8192	8192 P/R

Signal UVW Number of Poles

24 : 24(12Pulses)Poles

Cable Length

050 : 500mm (Standard)

External Dimension

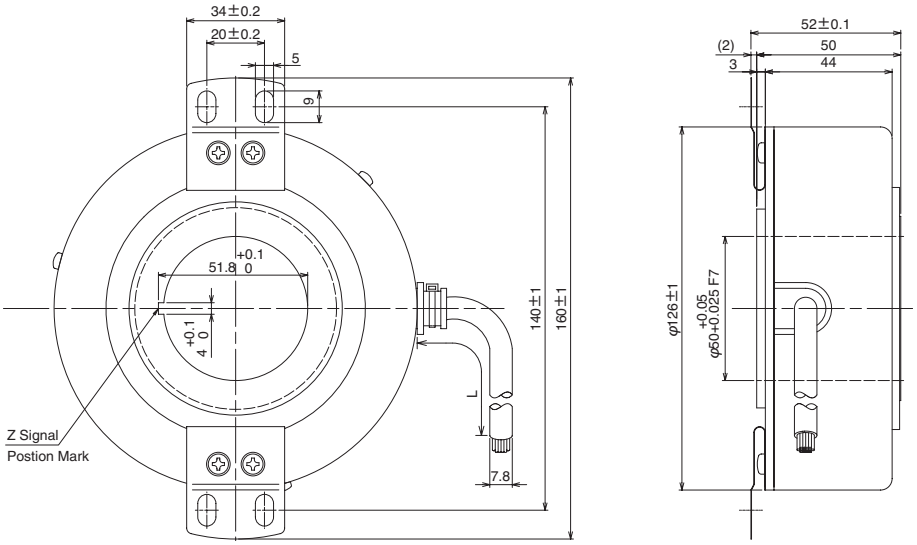

Circuit of Output Signal

6MD

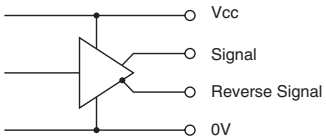

Supporting your great ideas
www.pewatron.com
PEWATRON
a member of the Angst + Pfister Group

Electrical Spec.

TYPE		6MD
Supply Voltage		DC 11.4 ~ 12.6V
Requirement		210 mA Max
Output Voltage	"H"	2.5 V or More
	"L" ※1	0.5 V Max
Maximum Output Current		20 mA MAX
Rise & Fall Time		200 ns Max
Maximum Frequency Response		68.3 kHz

※1)
at Maximum Output Current

Electrical Connections

Pin #	A	B
1	–	–
2	0V Common	+12V
3	–	–
4	$\overline{F0}$	F0
5	$\overline{F2}$	F2
6	$\overline{F3}$	F3
7	$\overline{F1}$	F1
8	Signal $\overline{Z}$	Signal Z
9	Signal $\overline{B}$	Signal B
10	Signal $\overline{A}$	Signal A

Wave Form.

CW → Rotating Toward Clockwise Viewed from an Arrow

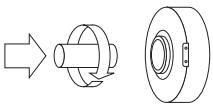

Rising point of A-Signal is always at one point while Z-Signal is at H-Level in CW.

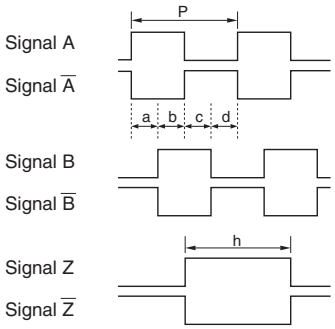

$$P = \frac{1}{1\text{Resolution}}$$

$$a, b, c, d = \frac{P}{4} \pm \frac{P}{8} \qquad \frac{P}{2} \leqq h \leqq \frac{3P}{2}$$

Wave Ratio (Duty); 50 ± 25 (%)

●When UVW phases output are 4 poles at 120˚.

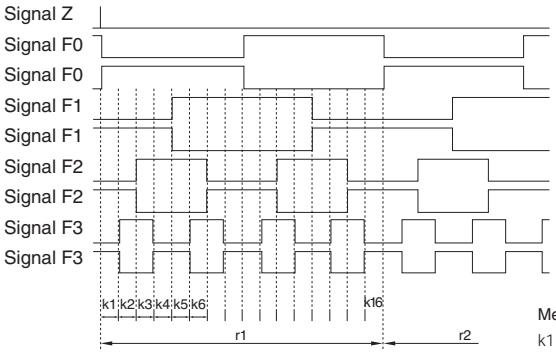

Mechanical Augular
k1 ~ k16 1.875˚ ± 0.5˚
r1, r12 30 ± 2˚

Position Relation between F0 and Z phases
Mechanical Augular 0˚ ± 0.9˚

Mechanical Spec.

Starting Torque		49×10^{-2}N • m Max
Shaft Loading	Thrust axial	29.4N
	Radial	49N
Moment of Inertia		1.5×10^{-3}kg • m²
Maximum RPM		500r/min
Net Weight (W/O Cable)		2kg Max

Environmental Spec.

Operating Temperature	–10˚C ~ +70˚C
Storage Temperature	– 20˚C ~ +85˚C
Humidity	RH 85% Max No Condensation
Vibration	50 Hz / 1.5mm 2 h
Shock	196m/s²,15ms X, Y, Z Each 3 times
Degree of Protection	IP50

PEWATRON
a member of the Angst + Pfister Group

We are here for you. Addresses and Contacts

Sales Switzerland

Postcode 3000 – 9999
Liechtenstein

Matthias Rüegg
Ruhbergstrasse 32
CH-9230 Flawil

Phone + 41 44 877 35 18
Mobile + 41 76 491 66 66
Fax + 41 44 877 35 19

matthias.rueegg@pewatron.com

Postcode 1000 – 2999

Raffael Favaretto
Route d'Oron 124
CH-1673 Promasens

Phone + 41 44 877 35 22
Mobile + 41 76 444 63 14
Fax + 41 44 877 35 23

raffael.favaretto@pewatron.com

Sales Germany

Postcode 60000 – 79999

Dieter Hirthe
Mühlweg 23
D-71554 Weissach i.T.

Phone + 49 719 149 60 58
Mobile + 49 163 762 74 30
Fax + 49 719 193 31 88

dieter.hirthe@pewatron.com

Postcode 10000 – 59999
Postcode 80000 – 99999

Kurt Stritzelberger
Neumarkter Str. 86a
D-81673 Munich

Phone + 49 89 260 38 47
Mobile + 49 171 803 41 35
Fax + 49 89 43 10 91 91

kurt.stritzelberger@pewatron.com

Key Accounts
Aerospace and Defence

Claus Wübbena
Vogelkamp 26
D-26655 Westerstede

Phone + 49 4488 5204 614
Mobile + 49 173 9700 691
Fax + 49 4488 5204 616

claus.wuebbena@pewatron.com

Sales Austria

Kurt Stritzelberger
Neumarkter Str. 86a
D-81673 Munich

Phone + 49 89 260 38 47
Mobile + 49 17 18 03 41 35
Fax + 49 89 43 10 91 91

kurt.stritzelberger@pewatron.com

Sales Other Countries / Product Management

Sensors

Physical Sensors
Data Acquisition

Peter Felder
Phone + 41 44 877 35 05
peter.felder@pewatron.com

Geometrical Sensors

Eric Letsch
Phone + 41 44 877 35 14
eric.letsch@pewatron.com

Power Supplies

DC-DC Converters
Switching Power Supplies
DC-AC Inverters

Sebastiano Leggio
Phone + 41 44 877 35 06
sebastiano.leggio@pewatron.com

E-Components

Current Sensors
Man Machine Interface
Measurement Probes

Sebastiano Leggio
Phone + 41 44 877 35 06
sebastiano.leggio@pewatron.com

PEWATRON AG
Thurgauerstrasse 66
CH-8052 Zurich

Phone + 41 44 877 35 00
Fax + 41 44 877 35 25

www.pewatron.com
info@pewatron.com