HD25A

Absolute Industrial Rugged Metal Optical Encoder

Absolute Industrial Rugged Metal Optical Encoder, Page 1 of 5

Description

The HD25A is a rugged absolute encoder designed for heavy duty industrial use. This absolute encoder is a non-contacting optical rotary position sensor which reports the shaft angle within a 360 range. The HD25A can be used for automation, motion control and robotic applications. As opposed to incremental encoders, the HD25A reports the absolute position rather than just the change in position. The HD25A is a true absolute encoder over one revolution, and also has a multi-turn mode. When powered up, it does not require a home cycle, even if the shaft was rotated while the power was off. In multi-turn mode, it tracks the position in a 32-bit counter as long as the power supply is maintained. Internally, an infrared LED flashes through a circular bar code onto a linear array sensor. The microcontroller decodes the image into a unique position. All user programmable parameters such as resolution, origin, direction, and mode are permanently stored in an internal EEPROM.

The interface of the HD25A has 2 separate outputs, one utilizes our digital SEI (Serial Encoder Interface) bus and the other is an analog output. The SEI bus is a simple, quick, convenient network of devices interfacing to a RS232 serial port. The SEI bus supports 1 to 15 devices on a single cable up to 1000 feet long (RS-485 like). The analog output provides an analog voltage proportional to the angular position, with 12-bit resolution.

For access to both the SEI bus and analog signal outputs, the AD7 adapter is recommended. US Digital offers two SEI to PC interfaces: The AD2B adapter for interface to an RS-232 port and the SEI-USB for interface to a USB port. One of these products is required in order to interface the HD25A to a PC via our SEI bus. The wall-mount PS-12 power supply furnishes the power for all devices on the SEI bus.

Our absolute encoders may be used in many stand alone applications that do not require a PC interface. For these applications we provide detailed communications protocols for all of our absolute products (see the SEI Absolute Encoder Communications Protocol page).

US digital provides software free of charge for all products which require software for operation. The software can be used as is or it can serve as an example for creating your own custom application. The absolute encoder software utilizes our SEI...

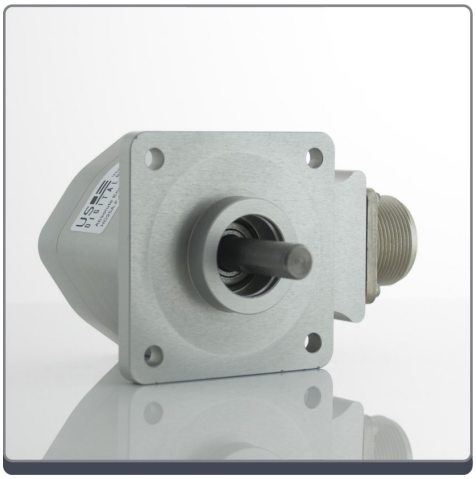

Features

- NEMA size 25 package
- Anodized milled aluminum housing with O-ring housing seal
- ABEC 5 bearings
- 3/8" diameter shaft
- Up to 15 devices on a single 6-pin telephone-type cable
- 12-bit accuracy
- Update rate is 4 milliseconds
- EEPROM stores downloadable parameters
- Field programmable resolution (2 to 4096 CPR)
- Remotely updatable firmware

HD25A

Absolute Industrial Rugged Metal Optical Encoder

Description (Continued)

... Explorer software to configure and communicate with the product from a PC platform.

Analog Output:

The HD25A has a 12-bit DAC and 2 dedicated analog output line (Analog+, Analog-). This DAC has a full range of 0 to 4.095V, which is 1mV per bit. The value which the internal microcontroller sends to that DAC is the same as the digital value that it sends to the host. Since the resolution (which represents the number of codes per revolution) is field programmable, the range of the DAC will also follow that setup. Our default resolution is 3600 CPR which yields 1 count per tenth of a degree. This makes the DAC output equal to 1mV per tenth of a degree or 0 to 3.599V. When the DAC needs to have the full range to 4.095V, the single turn resolution should be set to 4096. This is easily done with the available software which runs on a PC. See referenced documents information on the AD7 HD25A Breakout Box.

Available Options:

- Shaft seal to protect the encoder from liquids. Note that this option adds about 3.5 in-oz. of shaft drag.
- 3/8" diameter shaft with or without flat.

Notice:

In applications where a failure could result in an unacceptable loss, we recommend that your system be designed to include two redundant encoders with the outputs from both continuously compared to make sure that they agree. If there is a discrepancy, the system should be designed to automatically shut down as a fail-safe measure to minimize the risk of damage or danger. This product is not certified for applications where a failure could result in a costly, dangerous, or life threatening situation.

Mechanical Drawing

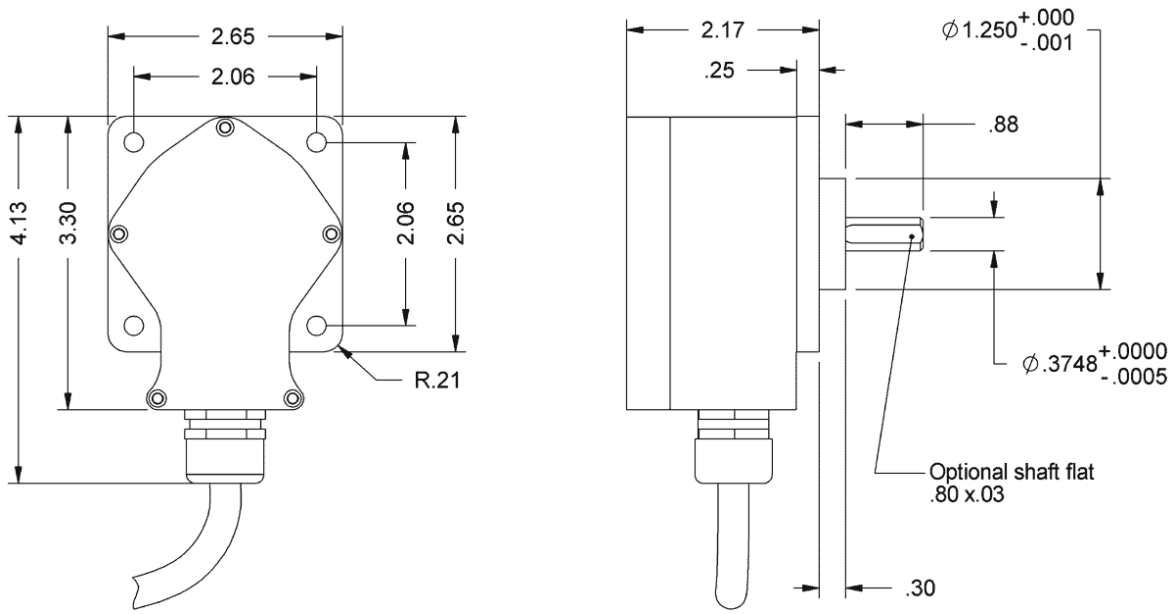

HD25A

Absolute Industrial Rugged Metal Optical Encoder

Absolute Industrial Rugged Metal Optical Encoder, Page 3 of 5

Setup Example

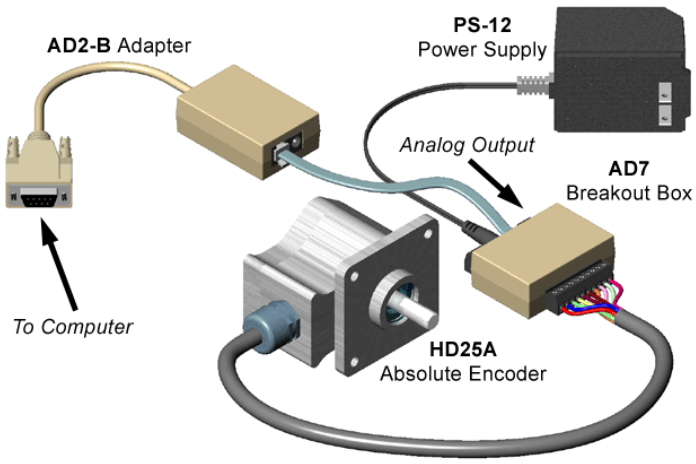

Mechanical

Max Axial Load	250 pounds
Max Radial Load	100 pounds
Bearings	ABEC 5 440 stainless steel with light preload
Bearing Life in Millions of Revs.	(124 / load in lbs.) ^3
Bearing Life at 4 Pound Load	2,300,000,000 Revs.
Moment of Inertia	2.8 x 10 ^-4 oz-in-sec²
Max Acceleration	100,000 rev / sec²
Max RPM Without Seal (Mechanical) Max RPM WIth Seal (mechanical) (both limited by electrical tracking)	15,000 6,000 3,600 single-turn, 1,800 multi-turn
Size	NEMA size 25
Housing and Cover Material	Anodized aluminum
Weight	16.91 oz.
Shaft Material	Stainless steel and nickelplate
Shaft Diameter	.3745 - .3748 (3/8) in.
Shaft Optional Flat Size	.80 long x .03 in. deep
Shaft Runout	≤ .0003 T.I.R.
Shaft Torque (without optional Seal)	< 1/2 in-oz.
Shaft Torque (with optional Seal)	3.5 in-oz. typical

HD25A

Absolute Industrial Rugged Metal Optical Encoder

Accessories

Accessories

- SEI Explorer
- AD2B RS232 to SEI Adaptor
- SEI-USB SEI to USB Adaptor
- AD7 HD25A Breakout Box

Electrical

Parameter	Min.	Typ.	Max.	Units
Supply Voltage (PWR)	5.5	-	16	Volts
Supply Current (active)	-	16	18.5	mA
Supply Current (sleep)	-	-	1.5	mA
Analog Output Impedance (Anlg+)	950	1,000	1,050	Ohms
Zero Scale Analog Voltage	0	.0005	.003	Volts
Full Scale Analog Voltage	4.079	4.095	4.111	Volts
Differential Nonlinearity	-1.0	-	1.0	LSB

Absolute Maximum Ratings

Parameter	Min.	Max.	Units
Supply Voltage (PWR)	0	16	Volts
DataH, DataL, Busy+, Busy-	-14	14	Volts
Electrical Tracking (Multi-turn Mode)	-	1800	RPM
Electrical Tracking (Single-turn Mode)	-	3600	RPM
Position Update Rate*	-	4	mS

Environmental Specifications

Operating Temperature	-25 to 70C
Storage Temperature	-40 to 100C
Shock	60G's for 11mS
Vibration (5 to 2kHz)	20Hz to 2000Hz @ 20G's
Humidity With Shaft Seal	100% condensing (NEMA IP65)
Humidity Without Shaft Seal	98% non-condensing

HD25A

Absolute Industrial Rugged Metal Optical Encoder

Absolute Industrial Rugged Metal Optical Encoder, Page 5 of 5

Ordering Information

HD25A - [ ] - [ ]

Flat	Seal
N =*Non-Flat*	N =*Non-Sealed*
F =*Flat*	S =*Sealed*

Notes

- Cables and connectors are not included and must be ordered separately.
- This product is warranted against defects in materials and workmanship for two years.

PEWATRON
a member of the Angst + Pfister Group

We are here for you. Addresses and Contacts

Sales Switzerland

Postcode 3000 – 9999
Liechtenstein

Matthias Rüegg
Ruhbergstrasse 32
CH-9230 Flawil

Phone + 41 44 877 35 18
Mobile + 41 76 491 66 66
Fax + 41 44 877 35 19

matthias.rueegg@pewatron.com

Postcode 1000 – 2999

Raffael Favaretto
Route d'Oron 124
CH-1673 Promasens

Phone + 41 44 877 35 22
Mobile + 41 76 444 63 14
Fax + 41 44 877 35 23

raffael.favaretto@pewatron.com

Sales Germany

Postcode 60000 – 79999

Dieter Hirthe
Mühlweg 23
D-71554 Weissach i.T.

Phone + 49 719 149 60 58
Mobile + 49 163 762 74 30
Fax + 49 719 193 31 88

dieter.hirthe@pewatron.com

Postcode 10000 – 59999
Postcode 80000 – 99999

Kurt Stritzelberger
Neumarkter Str. 86a
D-81673 Munich

Phone + 49 89 260 38 47
Mobile + 49 171 803 41 35
Fax + 49 89 43 10 91 91

kurt.stritzelberger@pewatron.com

Key Accounts
Aerospace and Defence

Claus Wübbena
Vogelkamp 26
D-26655 Westerstede

Phone + 49 4488 5204 614
Mobile + 49 173 9700 691
Fax + 49 4488 5204 616

claus.wuebbena@pewatron.com

Sales Austria

Kurt Stritzelberger
Neumarkter Str. 86a
D-81673 Munich

Phone + 49 89 260 38 47
Mobile + 49 17 18 03 41 35
Fax + 49 89 43 10 91 91

kurt.stritzelberger@pewatron.com

Sales Other Countries / Product Management

Sensors

Physical Sensors
Data Acquisition

Peter Felder
Phone + 41 44 877 35 05
peter.felder@pewatron.com

Geometrical Sensors

Eric Letsch
Phone + 41 44 877 35 14
eric.letsch@pewatron.com

Power Supplies

DC-DC Converters
Switching Power Supplies
DC-AC Inverters

Sebastiano Leggio
Phone + 41 44 877 35 06
sebastiano.leggio@pewatron.com

E-Components

Current Sensors
Man Machine Interface
Measurement Probes

Sebastiano Leggio
Phone + 41 44 877 35 06
sebastiano.leggio@pewatron.com

PEWATRON AG
Thurgauerstrasse 66
CH-8052 Zurich

Phone + 41 44 877 35 00
Fax + 41 44 877 35 25

www.pewatron.com
info@pewatron.com