Eltra® sensing technology

EMA - EMS 22

SINGLETURN ABSOLUTE
MAGNETIC ENCODERS

ISO 9001:2000

MAGNETIC SINGLETURN ABSOLUTE ENCODERS

MAIN FEATURES

EM series encoders are suitable for several application fields like electric motors marine industry, iron and steel industry, textile machines, wood-working, paper-working, glass working, marble-working machinery and, more generally, automation and process control fields.
Main characteristics:

- Compact dimensions
- Absence of physical contact between encoder and motor shaft
- High temperature resistant
- High resolution and precision
- High protection rating
- High operating speed
- Excellent mechanical sturdiness
- Very easy mounting

ORDERING CODE

EM A 22 A 512 B 5 S P X 6 S 10 P R . XXX

SERIES
magnetic encoder EM

TYPE
absolute A
sinusoidal S

SIZE
mm 22

TYPE BODY AND FLANGING
flange type A aluminum A
flange type A anodized aluminum AY

RESOLUTION
(EMA series) (only powers of 2) ppr from 4 to 8192
(EMA series) ppr 40 / 80 / 100 / 160 / 200 / 320 / 400 / 500 / 800 / 1000 / 1600 / 2000
(EMS series) ppr 1
please directly contact our offices for pulses availability

CODE
(EMA series) binary B
(EMS series) unused option X

POWER SUPPLY
5 V DC 5

OUTPUT TYPE
(EMA series) SSI S
(EMS series) sine - cosine line driver L

LOGIC
P positive (EMA series)
X unused option (EMS series)

OPTION
X unused option

BORE DIAMETER (MAGNET CARRIER)
6 ø 6 mm
8 ø 8 mm
9 ø 9.52 mm (3/8")
10 ø 10 mm

ENCLOSURE RATING
S IP 68

MAX ROTATION SPEED
10 10000 rpm

OUTPUT TYPE
P cable output (standard length 0.5 m)

OUTPUT DIRECTION
A axial
R radial

VARIANT
XXX custom version

100519

EMA - EMS 22 cable output axial

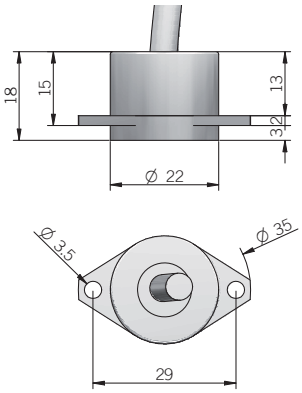

EMA - EMS 22 cable output radial

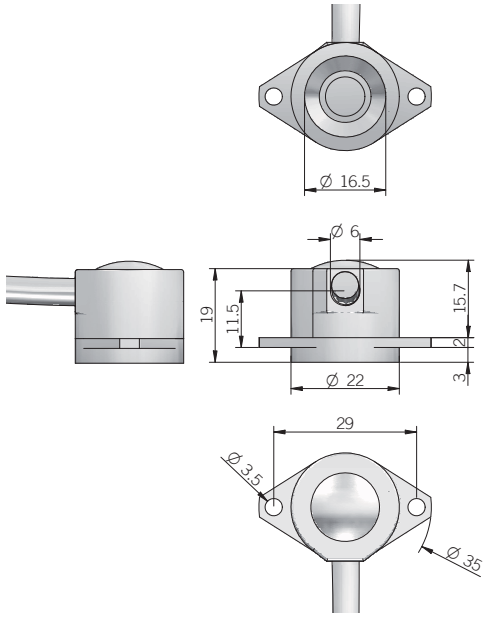

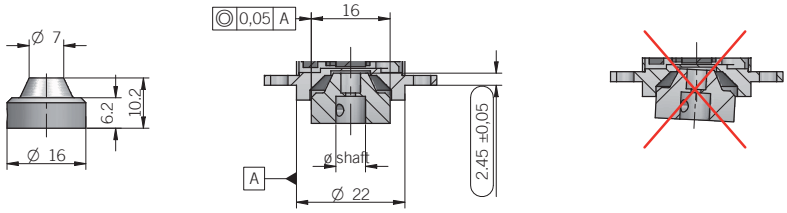

Electrical specifications

Resolution	up to 8192 ppr (EMA series) 1 ppr (EMS series)
Current consumption without load	100 mA max
Max load current	15 mA per channel (EMS series)
Power supply	5 V DC ±10%
Output types	RS422 SSI (EMA series) sine - cosine (EMS series) 1 Vpp
Max output frequency	1 MHz (EMA series) 1 KHz (EMS series)
Monostable time (SSI)	10÷25 µs
Accuracy	± 0.35° max
Counting direction	decreasing clockwise (shaft view)
Electromagnetic compatibility	IEC 61000-6-2 IEC 61000-6-3

Connections and standard colours

Wire colours	Function (EMA 22)	Function (EMS 22)
black	0 Volt	0 Volt
red	+ Vdc	+ Vdc
green	Data +	Sin +
brown	Data -	Sin -
yellow	Clk +	Cos +
orange	Clk -	Cos -
shield	⏚	⏚

Mechanical specifications

Bore diameter (magnet carrier)	upt to 10 mm
Enclosure rating	IP 68
Max rotation speed	10000 rpm
Shock	50 G, 11 ms (IEC 60068-2-27)
Vibration	10 G, 10÷2000 Hz (IEC 60068-2-6)
Body material	aluminum UNI 9002/5
Housing material	aluminum UNI 9002/5
Magnet carrier material	aluminum UNI 9002/5
Operating temperature	-40° ... +125 °C
Storage temperature	-25° ... +85 °C
Weight	30 g
Mounting tolerances	± 0.2 mm (axial) ± 0.1 mm (radial)

www.eltra.it - eltra@eltra.it

© Copyright 2010 Eltra S.p.a. Unipersonale. All rights reserved. All informations in this catalog are subject to change without notice.
Eltra takes no responsibility for typographic errors. For the terms of sales please check the website www.eltra.it.

Supporting your great ideas
www.pewatron.com
PEWATRON a member of the Angst + Pfister Group

PEWATRON
a member of the Angst + Pfister Group

We are here for you. Addresses and Contacts

Sales Switzerland

Postcode 3000 – 9999
Liechtenstein

Matthias Rüegg
Ruhbergstrasse 32
CH-9230 Flawil

Phone + 41 44 877 35 18
Mobile + 41 76 491 66 66
Fax + 41 44 877 35 19

matthias.rueegg@pewatron.com

Postcode 1000 – 2999

Raffael Favaretto
Route d'Oron 124
CH-1673 Promasens

Phone + 41 44 877 35 22
Mobile + 41 76 444 63 14
Fax + 41 44 877 35 23

raffael.favaretto@pewatron.com

Sales Germany

Postcode 60000 – 79999

Dieter Hirthe
Mühlweg 23
D-71554 Weissach i.T.

Phone + 49 719 149 60 58
Mobile + 49 163 762 74 30
Fax + 49 719 193 31 88

dieter.hirthe@pewatron.com

Postcode 10000 – 59999
Postcode 80000 – 99999

Kurt Stritzelberger
Neumarkter Str. 86a
D-81673 Munich

Phone + 49 89 260 38 47
Mobile + 49 171 803 41 35
Fax + 49 89 43 10 91 91

kurt.stritzelberger@pewatron.com

Key Accounts
Aerospace and Defence

Claus Wübbena
Vogelkamp 26
D-26655 Westerstede

Phone + 49 4488 5204 614
Mobile + 49 173 9700 691
Fax + 49 4488 5204 616

claus.wuebbena@pewatron.com

Sales Austria

Kurt Stritzelberger
Neumarkter Str. 86a
D-81673 Munich

Phone + 49 89 260 38 47
Mobile + 49 17 18 03 41 35
Fax + 49 89 43 10 91 91

kurt.stritzelberger@pewatron.com

Sales Other Countries / Product Management

Sensors

Physical Sensors
Data Acquisition

Peter Felder
Phone + 41 44 877 35 05
peter.felder@pewatron.com

Geometrical Sensors

Eric Letsch
Phone + 41 44 877 35 14
eric.letsch@pewatron.com

Power Supplies

DC-DC Converters
Switching Power Supplies
DC-AC Inverters

Sebastiano Leggio
Phone + 41 44 877 35 06
sebastiano.leggio@pewatron.com

E-Components

Current Sensors
Man Machine Interface
Measurement Probes

Sebastiano Leggio
Phone + 41 44 877 35 06
sebastiano.leggio@pewatron.com

PEWATRON AG
Thurgauerstrasse 66
CH-8052 Zurich

Phone + 41 44 877 35 00
Fax + 41 44 877 35 25

www.pewatron.com
info@pewatron.com