NEMICON

HANDY PENDANT

HP-L Model

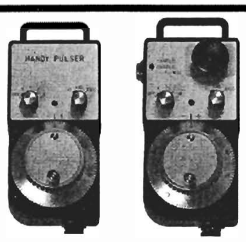

Economical Palm Size Model

- Low Cost Prastic Box Type.
- Comfortable Size for Hand.

Model

HP – L01 – 2□□ – P□□ – □□□ – 00
V0025

Resolution
- L01 : 100 P/R
- V0025 : 25 P/R

Signals — A&B With Phase Difference of 90°

Output Mode
- Z1 : Voltage Output (NPN Tr.)[Internal Resistor 2kΩ]
- Z9 : Voltage Output (NPN Tr.)[Internal Resistor 330Ω FANUC Spec.]
- H : Voltage Output (NPN Tr.)[Internal Resistor 2kΩ MELDAS Spec.]※
- D : Line Driver Output(Only for100P/R)

※Only for 25 P/R

Recommended Model
HP-L01-2Z1
HP-L01-2Z9
HP-L01-2D
HP-V01-2Z1
HP-V0025-2H

Optional Switches
- L0 : Without Switches
- L1 : With an Enable Switch
- L2 : With an Emergency Stop Switch
- L3 : With Emergency Stop and Enable Switches

Cable Length
- 200 : 2m
- 300 : 3m
- 500 : 5m

External Dimension

L0

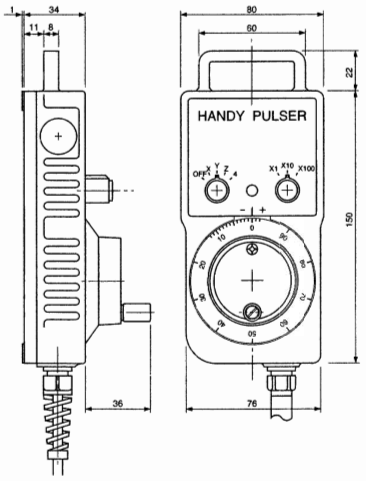

L3

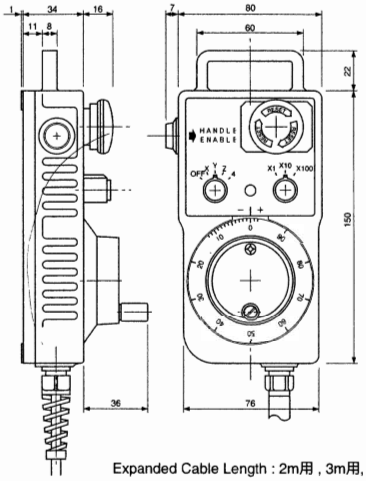

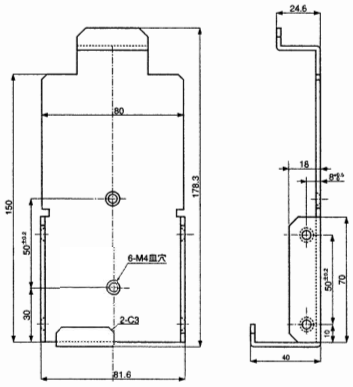

Expanded Cable Length : 2m用 , 3m用, 5m用 Holder(Option)

Circuit of Output Signal

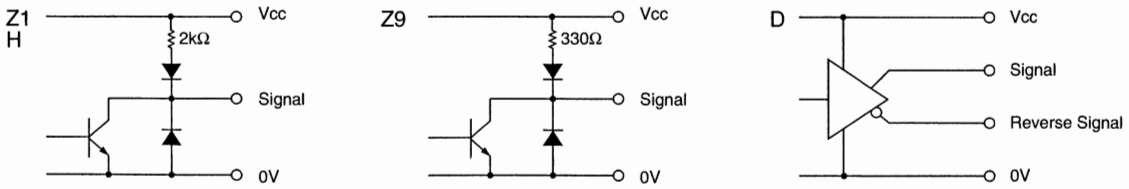

Electrical Spec.

Manual Pulse Generator

TYPE		Z1	Z9	H	D
Power Source		HP-L:DC+5V±10% HP-V:DC+4.5V to13.2V	DC5V±10%	DC12V±10%	DC5V±5%
Current Consumption		60mA Max	80mA Max	50mA Max	150mA Max
1Pulse Per a Revolution		100P/R・25P/R		25P/R	100P/R・25P/R
Output Voltage	"H"	Within –1 Power Voltage		+5±10%	2.5Vor More
	"L" ※1	0.5V Max			
Max. Response Frequency ※2		5kHz			
Signal Rising & Falling Time		1 μs Max		1.5 μs Max	200ns Max
Max. Sinking Current		20 mA MAX			

※1) at Maximum Output Current ※2) Without Click Mechanism

Switches Specification

Rotary Switches

Contact Rating	0.4 VA	Maximum Voltage	25 V
Current		0.1～50 mA	

Enable Switch

Contact Rating ※1	With AC Load Resistance	AC220V 0.5A , AC110V 1.0A
	With DC Load Resistance	DC 24V 1.0A

Emergency Stop Switch

Contact Rating ※1	With AC Load Resistance	AC250V 0.5A , AC125V 1.0A
	With DC Load Resistance	DC 30V 1.0A

※1Min. Load DC 5V 1mA

Wave Form.

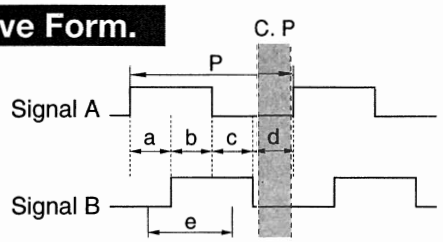

$P = \frac{1}{1\text{Resolution}}$ a, b, c, d = $\frac{P}{4} \pm \frac{P}{8}$

Duty Ratio (A,B)50 ± 25(%)

C. P = Click Point

※1) Inverted Output is available for 2D type.

※2) Point "e" is recommended as the system switching timing

Electrical Connections

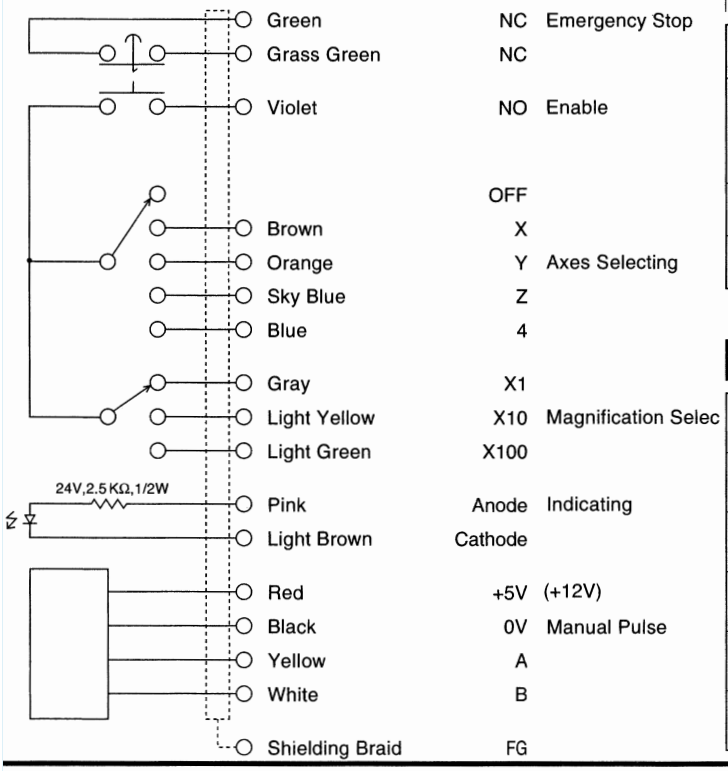

Mechanical Spec.

Starting Torque		1.96×10^{-2}N•m~5.9×10^{-2}N•m
Shaft Loading	Thrust axial	9.8N
	Radial	19.6N
Maximum RPM		200r/min
Net Weight		500g Max

Environmental Spec.

Operating Temperature	– 10℃ ~ +60℃
Storage Temperature	– 20℃ ~ +80℃
Humidity	RH 85% Max No Condensation
Vibration	10 ~ 55 Hz / 1.5mm 2 h
Shock	490m/s²,11ms X, Y, Z Each 3 times
Protection	to IP67(for Box)

PEWATRON
a member of the Angst + Pfister Group

We are here for you. Addresses and Contacts

Sales Switzerland

Postcode 3000 – 9999
Liechtenstein

Matthias Rüegg
Ruhbergstrasse 32
CH-9230 Flawil

Phone + 41 44 877 35 18
Mobile + 41 76 491 66 66
Fax + 41 44 877 35 19

matthias.rueegg@pewatron.com

Postcode 1000 – 2999

Raffael Favaretto
Route d'Oron 124
CH-1673 Promasens

Phone + 41 44 877 35 22
Mobile + 41 76 444 63 14
Fax + 41 44 877 35 23

raffael.favaretto@pewatron.com

Sales Germany

Postcode 60000 – 79999

Dieter Hirthe
Mühlweg 23
D-71554 Weissach i.T.

Phone + 49 719 149 60 58
Mobile + 49 163 762 74 30
Fax + 49 719 193 31 88

dieter.hirthe@pewatron.com

Postcode 10000 – 59999
Postcode 80000 – 99999

Kurt Stritzelberger
Neumarkter Str. 86a
D-81673 Munich

Phone + 49 89 260 38 47
Mobile + 49 171 803 41 35
Fax + 49 89 43 10 91 91

kurt.stritzelberger@pewatron.com

Key Accounts
Aerospace and Defence

Claus Wübbena
Vogelkamp 26
D-26655 Westerstede

Phone + 49 4488 5204 614
Mobile + 49 173 9700 691
Fax + 49 4488 5204 616

claus.wuebbena@pewatron.com

Sales Austria

Kurt Stritzelberger
Neumarkter Str. 86a
D-81673 Munich

Phone + 49 89 260 38 47
Mobile + 49 17 18 03 41 35
Fax + 49 89 43 10 91 91

kurt.stritzelberger@pewatron.com

Sales Other Countries / Product Management

Sensors

Physical Sensors
Data Acquisition

Peter Felder
Phone + 41 44 877 35 05
peter.felder@pewatron.com

Geometrical Sensors

Eric Letsch
Phone + 41 44 877 35 14
eric.letsch@pewatron.com

Power Supplies

DC-DC Converters
Switching Power Supplies
DC-AC Inverters

Sebastiano Leggio
Phone + 41 44 877 35 06
sebastiano.leggio@pewatron.com

E-Components

Current Sensors
Man Machine Interface
Measurement Probes

Sebastiano Leggio
Phone + 41 44 877 35 06
sebastiano.leggio@pewatron.com

PEWATRON AG
Thurgauerstrasse 66
CH-8052 Zurich

Phone + 41 44 877 35 00
Fax + 41 44 877 35 25

www.pewatron.com
info@pewatron.com