EM1 Transmissive Optical Encoder Module

RoHS COMPLIANT

Description

The **EM1** is a transmissive optical encoder module designed to be an improved replacement for the Avago HEDS-9000 series encoder module. This module is designed to detect rotary or linear position when used together with a code wheel or linear strip. The **EM1** consists of a lensed LED source and a monolithic detector IC enclosed in a small polymer package. The **EM1** uses phased array detector technology to provide superior performance and greater tolerances over traditional aperture mask type encoders.

The **EM1** provides digital A & B quadrature outputs with an optional third output index channel. Each **EM1** module is resolution specific and is matched to the resolution of a code wheel or linear strip. All standard resolutions offered by the HEDS-9000 series encoder module, as well as additional resolutions, are now supported by the **EM1** module. The **EM1** operates on 5 VDC supply voltage and provides single ended outputs which are capable of both sinking and sourcing 8mA. An internal 0.1 ufd decoupling capacitor is designed into the **EM1** to provide enhanced noise immunity over the HEDS-9000 series encoder modules.

For open collector and higher voltage applications, add the PC3 cable driver, or for differential cable driver outputs, add the PC4 cable driver. Encoder disks, linear strips, quadrature decoder chips, counter chips, computer interface boards, mating connectors and cables are also available.

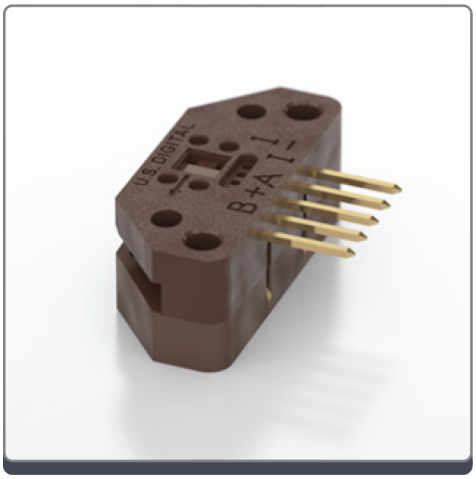

Features

- Two channel quadrature with optional index
- Improved replacement for HEDS-9000 Series
- Single 5 VDC supply
- Resolutions from 32 to 2500 CPR
- Internal decoupling capacitor
- Sink/source 8mA outputs

Rev. 120118092442

EM1 Transmissive Optical Encoder Module

RoHS COMPLIANT

Linear Strip Alignment

EM1 Transmissive Optical Encoder Module
Linear Strip Alignment

RELEASE DATE: 11/09/2011

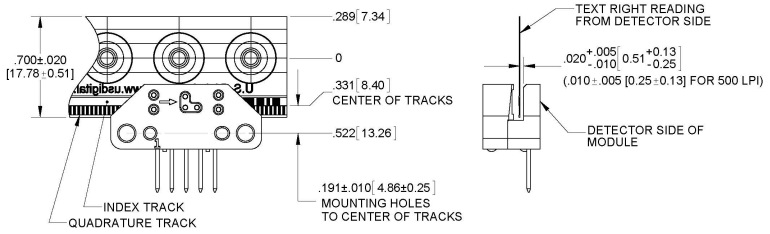

US DIGITAL 1400 NE 136th Avenue Vancouver, Washington 98684, USA
info@usdigital.com www.usdigital.com
Local: 360.260.2468 Toll-free: 800.736.0194

UNITS: INCHES [MM]
METRIC SHOWN FOR REFERENCE ONLY

Disk Alignment

EM1 Transmissive Optical Encoder Module
Disk Alignment

RELEASE DATE: 11/09/2011

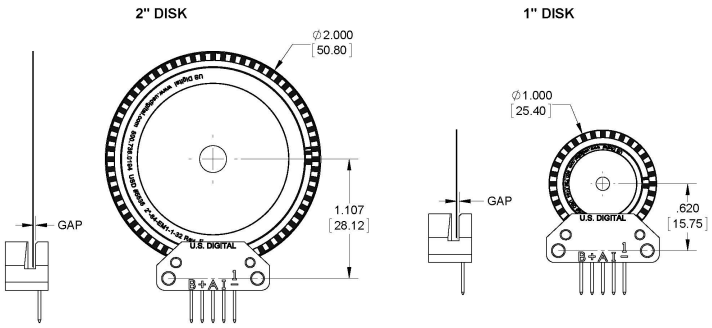

RECOMMENDED DISK GAP: .020 +.005 -.010 [0.51 +0.13 -0.25]
(.020±.005 [0.51±0.13] FOR 32 CPR 1" DISKS OR 64 CPR 2" DISKS)

US DIGITAL 1400 NE 136th Avenue Vancouver, Washington 98684, USA
info@usdigital.com www.usdigital.com
Local: 360.260.2468 Toll-free: 800.736.0194

UNITS: INCHES [MM]
METRIC SHOWN FOR REFERENCE ONLY

Rev. 120118092442

EM1 Transmissive Optical Encoder Module

Mechanical Drawing

EM1 Transmissive Optical Encoder Module

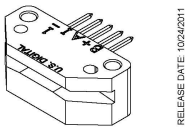

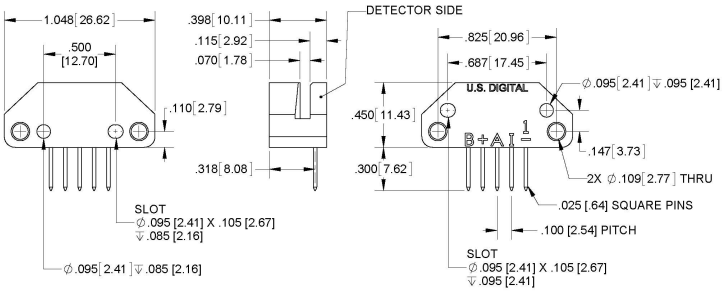

US DIGITAL
1400 NE 136th Avenue
Vancouver, Washington 98684, USA
info@usdigital.com
www.usdigital.com
Local: 360.260.2468
Toll-free: 800.736.0194

UNITS: INCHES [MM]
METRIC SHOWN FOR REFERENCE ONLY

Available Resolutions

CPR /LPI	1" Disk Non-index	1" Disk Index	2" Disk Non-index	2" Disk Index	Linear Strip Non-index	Linear Strip Index
32	EM1-1-32-N					
50	EM1-1-50-N	EM1-1-50-I				
64			EM1-1-32-N			
100	EM1-1-100-N	EM1-1-100-I	EM1-1-50-N	EM1-1-50-I		
120					EM1-0-120-N	EM1-0-120-I
125					EM1-0-127-N	EM1-0-127-I
127					EM1-0-127-N	EM1-0-127-I
150					EM1-0-150-N	EM1-0-150-I
180					EM1-0-180-N	EM1-0-180-I
200	EM1-1-200-N	EM1-1-200-I	EM1-1-100-N	EM1-1-100-I	EM1-0-200-N	EM1-0-200-I

Rev. 120118092442

EM1 Transmissive Optical Encoder Module

RoHS COMPLIANT

CPR /LPI	1" Disk Non-index	1" Disk Index	2" Disk Non-index	2" Disk Index	Linear Strip Non-index	Linear Strip Index
250	EM1-1-250-N	EM1-1-250-I			EM1-0-250-N	EM1-0-250-I
256	EM1-1-250-N	EM1-1-250-I				
300					EM1-0-300-N	EM1-0-300-I
360	EM1-1-360-N	EM1-1-360-I			EM1-0-360-N	EM1-0-360-I
400	EM1-1-400-N	EM1-1-400-I	EM1-1-200-N	EM1-1-200-I		
500	EM1-1-500-N	EM1-1-500-I	EM1-2-500-N	EM1-2-500-I	EM1-0-500-N	EM1-0-500-I
512	EM1-1-512-N	EM1-1-512-I				
720	EM1-1-720-N	EM1-1-720-I				
900	EM1-1-900-N	EM1-1-900-I				
1000	EM1-1-1000-N	EM1-1-1000-I	EM1-2-1000-N	EM1-2-1000-I		
1024	EM1-1-1024-N	EM1-1-1024-I	EM1-2-1024-N	EM1-2-1024-I		
1250	EM1-1-1250-N	EM1-1-1250-I				
1800			EM1-2-1800-N	EM1-2-1800-I		
2000			EM1-2-2000-N	EM1-2-2000-I		
2048			EM1-2-2048-N	EM1-2-2048-I		
2500			EM1-2-2500-N	EM1-2-2500-I		

Recommended Operating Conditions

Parameter	Min.	Max.	Units	Notes
Temperature	-55	125	C	
Supply Voltage	4.5	5.5	Vdc	Ripple (<100mV P-P)
Load Capacitance	-	100	pF	
Count Frequency	-	300	kHz	(rpm/60) x cycles/rev.
Disk Radial Position Tolerance	± .005		inch	with gap set by standard spacer tool

Electrical Specifications

Rev. 120118092442

EM1 Transmissive Optical Encoder Module

- Specifications apply over entire operating temperature range.
- Typical values are specified at Vcc = 5.0Vdc and 25 ° C.

Parameter	Min.	Typ.	Max.	Units	Conditions
Output Voltage	-0.5	-	Vcc	Vdc	
Supply Current (32-250 CPR)	-	27	30	mA	
Supply Current (500-2500 CPR)	-	55	57	mA	
Low-level Output	-	-	0.5	Vdc	I_{OL} = 8mA max.
High-level Output	2.0	-	-	Vdc	I_{OH} = -8mA max.
	4.2	4.8	-	Vdc	Unloaded
Output Current Per Channel	-8	-	8	mA	

Timing Characteristics

Encoding Characteristics:

- Specifications apply over entire operating temperature range.
- Values are for the worst error over full rotation.
- Refer to timing diagram below.

Parameter	Symbol	Min.	Typ.	Max.	Units
Cycle Error		-	3.0	5.5	° e
Symmetry		150	180	210	° e
Quadrature		45	90	100	° e
Index Pulse Width	Po	60	90	120	° e
Ch. I Rise After Ch. B or Ch. A Fall	t1	10	100	250	ns
Ch. I Fall After Ch. B or Ch. A Rise	t2	70	150	300	ns

Timing Diagram:

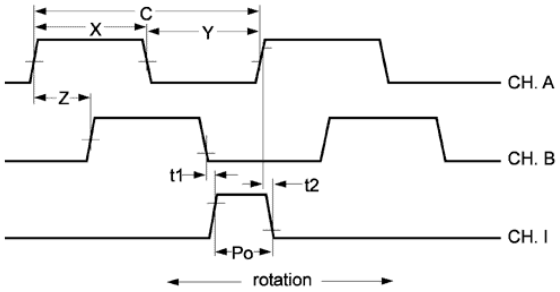

CPR (N): The number of Cycles Per Revolution.

Rev. 120118092442

One Shaft Rotation: 360 mechanical degrees, N cycles.

One Electrical Degree (° e): 1/360th of one cycle.

One Cycle (C): 360 electrical degrees (° e). Each cycle can be decoded into 1 or 4 codes, referred to as X1 or X4 resolution multiplication.

Symmetry: A measure of the relationship between (X) and (Y) in electrical degrees, nominally 180 ° e.

Quadrature (Z): The phase lag or lead between channels A and B in electrical degrees, nominally 90 ° e.

Index (CH I.): The index output goes high once per revolution, coincident with the low states of channels A and B, nominally 1/4 of one cycle (90 ° e).

Position Error: The difference between the actual shaft position and the position indicated by the encoder cycle count.

Cycle Error: An indication of cycle uniformity. The difference between an observed shaft angle which gives rise to one electrical cycle, and the nominal angular increment of 1/N of a revolution.

Installation Torque

Parameter	Torque
Mounting Screws	3.5-4 in-lbs

EM1 / HEDS Comparison

US Digital is the designer and manufacturer of the **EM1** transmissive optical encoder module. The design of the **EM1** provides electrical and mechanical compatibility with the Agilent **HEDS-9000**, **HEDS-9100**, **HEDS-9200**, **HEDS-9040**, and **HEDS-9140** series modules.

The process of switching from the **HEDS** to the **EM1** module should not require any mechanical or electrical changes. Simply use the **EM1** and matching codewheel in place of the **HEDS** module and codewheel. The **EM1** has a built-in index channel available on most resolutions, for both rotary disks and linear strips. The **EM1** uses a US Digital designed codewheel with 2 tracks rather than 3 tracks for index versions. Non-index codewheels are interchangable between the **EM1** and **HEDS** modules. The **EM1** offers improved output drive capability and will source and sink 8mA at TTL levels.

Physically, the **EM1** has no external wire loops which can interfere when mounting. The connector pins are 0.051" shorter than **HEDS** modules, while still providing .30" insertion depth. US Digital?s **EM1** offers custom and special resolutions.

Supporting your great ideas www.pewatron.com PEWATRON a member of the Angst + Pfister Group

EM1 Transmissive Optical Encoder Module

RoHS COMPLIANT

Ordering Information

EM1 - [ ] - [ ] - [ ]

Native OD	Native LPI/CPR	Index
0Linear	32	I =*Index*
1 =*1in*	50	N =*No Index*
2 =*2in*	100	
	120	
	127	
	150	
	180	
	200	
	250	
	256	
	300	
	360	
	400	
	500	
	512	
	720	
	900	
	1000	
	1024	
	1250	
	1800	
	2000	
	2048	
	2500	

Rules

- Native OD must be equal to 1 when Native LPI/CPR is equal to 32, 50, 100, 256, 400, 512, 720, 900 or 1250
- Native OD must be equal to 0 when Native LPI/CPR is equal to 120, 150, 300 or 127
- Native OD must be equal to 2 when Native LPI/CPR is equal to 2000, 2048, 1800 or 2500
- Native OD must be something other than 2 when Native LPI/CPR is equal to 200, 360 or 250
- Native OD must be something other than 0 when Native LPI/CPR is equal to 1000 or 1024
- Index must be something other than I when Native LPI/CPR is equal to 32

Notes

- US Digital warrants its products against defects in materials and workmanship for two years. See complete warranty for details.

Rev. 120118092442

PEWATRON
a member of the Angst + Pfister Group

We are here for you. Addresses and Contacts

Sales Switzerland

Postcode 3000 – 9999
Liechtenstein

Matthias Rüegg
Ruhbergstrasse 32
CH-9230 Flawil

Phone + 41 44 877 35 18
Mobile + 41 76 491 66 66
Fax + 41 44 877 35 19

matthias.rueegg@pewatron.com

Postcode 1000 – 2999

Raffael Favaretto
Route d'Oron 124
CH-1673 Promasens

Phone + 41 44 877 35 22
Mobile + 41 76 444 63 14
Fax + 41 44 877 35 23

raffael.favaretto@pewatron.com

Sales Germany

Postcode 60000 – 79999

Dieter Hirthe
Mühlweg 23
D-71554 Weissach i.T.

Phone + 49 719 149 60 58
Mobile + 49 163 762 74 30
Fax + 49 719 193 31 88

dieter.hirthe@pewatron.com

Postcode 10000 – 59999
Postcode 80000 – 99999

Kurt Stritzelberger
Neumarkter Str. 86a
D-81673 Munich

Phone + 49 89 260 38 47
Mobile + 49 171 803 41 35
Fax + 49 89 43 10 91 91

kurt.stritzelberger@pewatron.com

Key Accounts
Aerospace and Defence

Claus Wübbena
Vogelkamp 26
D-26655 Westerstede

Phone + 49 4488 5204 614
Mobile + 49 173 9700 691
Fax + 49 4488 5204 616

claus.wuebbena@pewatron.com

Sales Austria

Kurt Stritzelberger
Neumarkter Str. 86a
D-81673 Munich

Phone + 49 89 260 38 47
Mobile + 49 17 18 03 41 35
Fax + 49 89 43 10 91 91

kurt.stritzelberger@pewatron.com

Sales Other Countries / Product Management

Sensors

Physical Sensors
Data Acquisition

Peter Felder
Phone + 41 44 877 35 05
peter.felder@pewatron.com

Geometrical Sensors

Eric Letsch
Phone + 41 44 877 35 14
eric.letsch@pewatron.com

Power Supplies

DC-DC Converters
Switching Power Supplies
DC-AC Inverters

Sebastiano Leggio
Phone + 41 44 877 35 06
sebastiano.leggio@pewatron.com

E-Components

Current Sensors
Man Machine Interface
Measurement Probes

Sebastiano Leggio
Phone + 41 44 877 35 06
sebastiano.leggio@pewatron.com

PEWATRON AG
Thurgauerstrasse 66
CH-8052 Zurich

Phone + 41 44 877 35 00
Fax + 41 44 877 35 25

www.pewatron.com
info@pewatron.com