LX-PA SERIES
RATIOMETRIC VOLTAGE

The **LX-PA Series** linear position transducer with analog output is a low cost, compact alternative for use in light to moderate duty applications in dry environments. The plastic bodied device is ideal for high volume OEM situations where cost is a major consideration and in applications where small size or low weight are of paramount importance.

Model LX-PA is available in eleven different measurement ranges with a maximum range of 50" (1250 mm). The output is voltage from a potentiometric voltage divider circuit. In standard form, the electrical connections are made directly to the contacts on the potentiometer of the unit. Optional electrical cable attached to the potentiometer is available in various lengths. Standard potentiometer value is 1K ohm with optional values of 2K, 5K and 10K ohm available.

SPECIFICATIONS

General

- Measurement Ranges ..... See Table 1
- Sensing Device ..... Precision Potentiometer
- Resolution ..... Essentially Infinite
- Linearity
  - 2", 2.8", 3.8" 4.7" ranges ..... ±1.0% Full Scale
  - 10" to 25" ranges ..... ±0.5% Full Scale
  - 30" to 50" ranges ..... ±0.25% Full Scale
- Repeatability ..... ±0.03% Full Scale
- Construction ..... Thermoplastic Body
- Cable ..... Ø.018 (0.46 mm) Jacketed Stainless Steel
- Wire Rope Tension ..... See Table 1
- Weight ..... 3 oz. (85 gm)
- Connections ..... Solder terminals
- Dimensional Information ..... See Supplemental Data[1]
- Life
  - Ranges to 4.7" ..... 1,000,000 full stroke cycles
  - Ranges 10" to 25" ..... 250,000 full stroke cycles
  - Ranges 30" to 50" ..... 125,000 full stroke cycles

CIRCUIT DIAGRAM

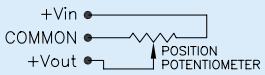

FOOTNOTES TO SPECIFICATIONS
1. Supplemental Data section located at end of LX Series pages.

Environmental

- Operating Temperature ..... -25°C to 75°C
- Storage Temperature ..... -50°C to 80°C
- Operating Humidity ..... 95 R.H. max. non-condensing
- Vibration ..... 15 G's 0.1 ms max.
- Shock ..... 50 G's 0.1 ms max.
- Ingress Protection ..... NEMA 1, IP-40

Electrical

- Input Impedance ..... 1000 Ω ±15%
- Output Impedance ..... 0 to 1000 Ω
- Excitation Voltage ..... 25 Volts max. AC or DC

TABLE 1

MODEL	RANGE (inch)	RANGE (mm)	NOMINAL OUTPUT (mV/V/in)	NOMINAL OUTPUT (mV/V/mm)	NOMINAL WIRE ROPE TENSION (oz)	NOMINAL WIRE ROPE TENSION (N)
LX-PA-2	2	50	469	18.5	16	4.4
LX-PA-2.8	2.8	70	341	13.4	14	3.9
LX-PA-3.8	3.8	96	258	10.1	11	3.1
LX-PA-4.7	4.7	120	207	8.1	8	2.2
LX-PA-10	10	250	88	3.5	16	4.4
LX-PA-15	15	380	64	2.5	14	3.9
LX-PA-20	20	500	49	1.9	11	3.1
LX-PA-25	25	625	39	1.5	8	2.2
LX-PA-30	30	750	32	1.3	14	3.9
LX-PA-40	40	1000	24	1.0	11	3.1
LX-PA-50	50	1250	20	0.8	8	2.2

Model Number Configuration

LX-PA-___-___-___-___

Range

- **2** ..... 2.0" (50 mm)
- **2.8** ..... 2.8" (70 mm)
- **3.8** ..... 3.8" (96 mm)
- **4.7** ..... 4.7" (120 mm)
- **10** ..... 10" (250 mm)
- **15** ..... 15" (390 mm)
- **20** ..... 20" (500 mm)
- **25** ..... 25" (640 mm)
- **30** ..... 30" (750 mm)
- **40** ..... 40" (1000 mm)
- **50** ..... 50" (1250 mm)

Potentiometer Value

- ✻ ..... 1K ohm
- **P2K** ..... 2K ohm
- **P5K** ..... 5K ohm
- **P10K** ..... 10K ohm

Electrical Cable Length

- ✻ ..... No Electrical Cable
- **LPM** ..... 150 mm (6") pigtail
- **L1M** ..... 1 m (3')
- **L2M** ..... 2 m (6.5')
- **L3M** ..... 3 m (10')
- **L4M** ..... 4 m (13.5')
- **L5M** ..... 5 m (16.5')

Connector

- ✻ ..... No Connector
- **C** ..... Cable to Cable Connector with Mating Connector
- **K** ..... Cable to Cable Connector with ***NO*** Mating Connector

For option "K", electrical cable with mating connector may be ordered separately as item number **10248-xM**, where "x" is the required length in meters.
1. "C" and "K" options only apply when electrical cable is selected.
2. Cable to cable connector does not connect cable shield/drain wire.

NOTE
1) ✻—Asterisk items are standard configuration. No option designator is required.
2) Shaded options available at additional cost.

Example
LX-PA-20-L1M

LX SERIES
SUPPLEMENTAL DATA

DIMENSIONAL INFORMATION

LX-PA

RANGE	Dim "A" (inch)	Dim "A" (mm)
2", 10"	1.01	25.7
2.8", 15", 30"	1.14	29.0
3.8", 20", 40"	1.30	33.0
4.7", 25", 50"	1.46	37.1

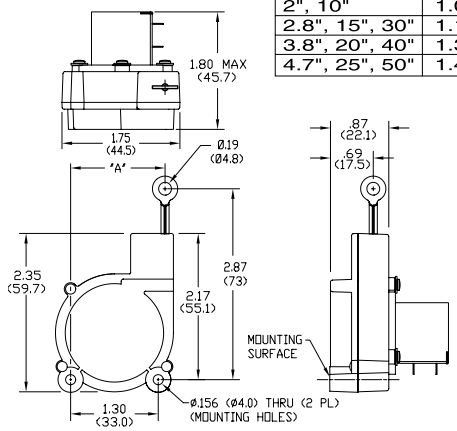

Dimensions in brackets are millimeters

LX-EP

RANGE	Dim "A" (inch)	Dim "A" (mm)
10"	1.01	25.7
15", 30"	1.14	29.0
20", 40"	1.30	33.0
25", 50"	1.46	37.1

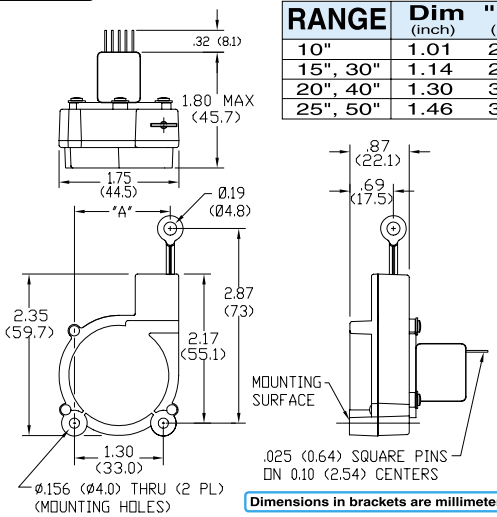

Dimensions in brackets are millimeters

ACCESSORY—10346 RIGHT ANGLE MOUNTING BRACKET

The Right Angle Mounting Bracket serves as a base for mounting the LX transducer perpendicular to a surface. The transducer may be mounted in any of four different wire rope exit orientations when mounted on the outside of the bracket (see figure) or any of three orientations when placed above the bracket mounting holes. Order model number: **10346**.

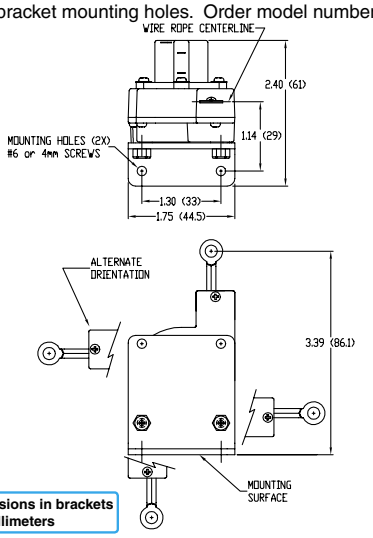

Dimensions in brackets are millimeters

10346 Right Angle Mounting Bracket

With Transducer Mounted

ACCESSORY—10156 TWO AXIS SWIVEL BASE

With a capability of 360° rotation about the vertical axis and 245° rotation about the horizontal axis, the 10156 Two Axis Swivel Base allows easy setup of the LX-PA or the LX-EP transducer. The axes may be locked in place after the transducer is oriented. Ideal for quick setups. Order model number: **10156**.

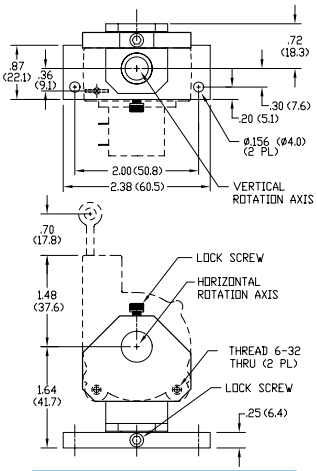

Dimensions in brackets are millimeters

10156 Two Axis Swivel Base

With Transducer Mounted

ACCESSORY—10067 AUXILIARY WIRE ROPE EXTENSION KIT

The auxiliary wire rope extension may be used to facilitate mounting the transducer remotely from the measurement point. The clip on the extension attaches to the eye fitting on the transducer. The eye fitting on the opposite end, which is identical to the fitting on the transducer, mounts to the moving element. The extension kit is also available with the clip end unterminated for situations where it is more convenient to size the wire rope length during installation. Clip and crimp fitting are included with the unterminated version.

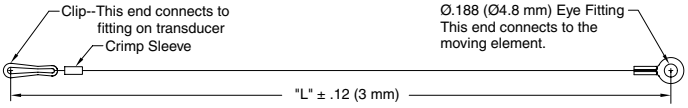

10067-__CM-__

Dimension "L"
Specify dimension "L" in centimeters to the **nearest whole centimeter.**

*.....Completed kit (no designator required)
U.....Unterminated clip end
(clip and crimp sleeve included in kit)

Note 1. 1 cm = 0.394", 1 inch = 2.54 cm
Note 2. Shortest length "L" is 5 cm (approximately 2").

* Leave blank. No designator required.

PEWATRON
a member of the Angst + Pfister Group

We are here for you. Addresses and Contacts

Sales Switzerland

Postcode 3000 – 9999
Liechtenstein

Matthias Rüegg
Ruhbergstrasse 32
CH-9230 Flawil

Phone + 41 44 877 35 18
Mobile + 41 76 491 66 66
Fax + 41 44 877 35 19

matthias.rueegg@pewatron.com

Postcode 1000 – 2999

Raffael Favaretto
Route d'Oron 124
CH-1673 Promasens

Phone + 41 44 877 35 22
Mobile + 41 76 444 63 14
Fax + 41 44 877 35 23

raffael.favaretto@pewatron.com

Sales Germany

Postcode 60000 – 79999

Dieter Hirthe
Mühlweg 23
D-71554 Weissach i.T.

Phone + 49 719 149 60 58
Mobile + 49 163 762 74 30
Fax + 49 719 193 31 88

dieter.hirthe@pewatron.com

Postcode 10000 – 59999
Postcode 80000 – 99999

Kurt Stritzelberger
Neumarkter Str. 86a
D-81673 Munich

Phone + 49 89 260 38 47
Mobile + 49 171 803 41 35
Fax + 49 89 43 10 91 91

kurt.stritzelberger@pewatron.com

Key Accounts
Aerospace and Defence

Claus Wübbena
Vogelkamp 26
D-26655 Westerstede

Phone + 49 4488 5204 614
Mobile + 49 173 9700 691
Fax + 49 4488 5204 616

claus.wuebbena@pewatron.com

Sales Austria

Kurt Stritzelberger
Neumarkter Str. 86a
D-81673 Munich

Phone + 49 89 260 38 47
Mobile + 49 17 18 03 41 35
Fax + 49 89 43 10 91 91

kurt.stritzelberger@pewatron.com

Sales Other Countries / Product Management

Sensors

Physical Sensors
Data Acquisition

Peter Felder
Phone + 41 44 877 35 05
peter.felder@pewatron.com

Geometrical Sensors

Eric Letsch
Phone + 41 44 877 35 14
eric.letsch@pewatron.com

Power Supplies

DC-DC Converters
Switching Power Supplies
DC-AC Inverters

Sebastiano Leggio
Phone + 41 44 877 35 06
sebastiano.leggio@pewatron.com

E-Components

Current Sensors
Man Machine Interface
Measurement Probes

Sebastiano Leggio
Phone + 41 44 877 35 06
sebastiano.leggio@pewatron.com

PEWATRON AG
Thurgauerstrasse 66
CH-8052 Zurich

Phone + 41 44 877 35 00
Fax + 41 44 877 35 25

www.pewatron.com
info@pewatron.com