JX-P420 SERIES
4 to 20 mA OUTPUT

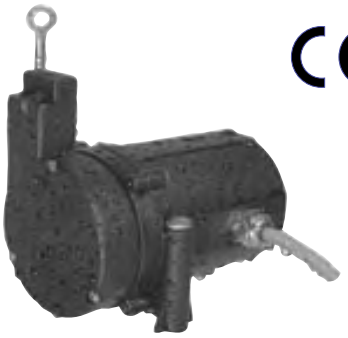

The JX-P420 series linear position measuring transducer is a low cost device for use in moderate duty applications in hostile wet or dry environments. The chemical resistant thermoplastic case of the transducer provides NEMA 4 (IP-65) ingress protection for applications where exposure to washdown, rain, oil and other liquids may occur. The sealed case is achieved through the use of o-rings and a low friction shaft seal. An integral dust wiper insures that the wire rope stays clear of debris as it is extracted and retracted. The standard electrical connection includes a sealed bulkhead fitting and multi-conductor electrical cable. An optional connector and mating connector are also available. As a convenience, optional connector locations on the transducer body are offered. The wire rope exit direction may be specified at time of order or may be user adjusted at time of installation.

The JX-P420 series transducer is a loop powered device with a 4 to 20 mA current output that requires a two wire connection. The transducer, power supply, and current monitor are connected in series. Zero and span adjustment potentiometers are accessible by removing two sealing screws in the rear of the transducer housing. Zero and span allow for adjustment for a full 4 to 20 mA output at between 50% and 100% of maximum linear travel.

SPECIFICATIONS

General

Measurement Range	See Range Table below
Sensing Device	Precision Potentiometer
Resolution	Essentially Infinite
Linearity	
2", 2.8", 3.8", 4.7" ranges	±1.0% Full Scale
10" to 25" ranges	±0.5% Full Scale
30" to 80" ranges	±0.25% Full Scale
Repeatability	±0.02% Full Scale
Construction	Thermoplastic Body
Wire Rope	Ø.018 (0.46 mm) Jacketed Stainless Steel
Wire Rope Tension	See Supplemental Data[1]
Weight	6.7 oz. (190 gm)
Connections	Electrical cable, or plastic connector
Life	
Ranges to 4.7"	2,000,000 full stroke cycles
Ranges 10" to 25"	500,000 full stroke cycles
Ranges 30" to 80"	250,000 full stroke cycles

Environmental

Operating Temperature	-25°C to 60°C
Storage Temperature	-50°C to 80°C
Operating Humidity	100% R.H. NEMA 4, 90% R.H. non-condensing NEMA 12
Vibration	15 G's 0.1 ms max.
Shock	50 G's 0.1 ms max.
Ingress Protection	NEMA 4X (IP-65) or NEMA 12 (IP-52)

Electrical

Output	4 to 20 mA
Load Resistance (Total Loop)	See Graph Below
Excitation Voltage	9 to 35 VDC
Minimum Supply Voltage	(.02 x Load Res.) + 9 VDC
Insulation Resistance	100 Megohms min. at 100 VDC
Zero Set Adjustment Range	0 to 30% of Range
Span Set Adjustment Range	80% to 100% of Range
Protection	Fused & Reversed Polarity

FOOTNOTES TO SPECIFICATIONS

1. Supplemental Data section located at end of JX Series pages.

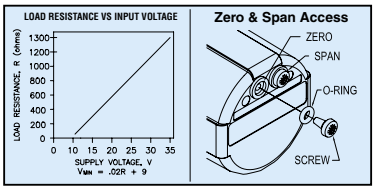

Model Number Configuration

JX-P420-__ - ___ - __ 0 - ___

Range

2	2" (50 mm)
2.8	2.8" (70 mm)
3.8	3.8" (96 mm)
4.7	4.7" (120 mm)
10	10" (250 mm)
15	15" (380 mm)
20	20" (500 mm)
25	25" (625 mm)
30	30" (750 mm)
40	40" (1000 mm)
50	50" (1250 mm)
60	60" (1500 mm)
80	80" (2000 mm)

Wire Rope

N ..... Ø.018" nylon jacketed stainless steel

Wire Rope Tension

1 ..... Standard (See Table A and Table B for values)

Wire Rope Exit Direction

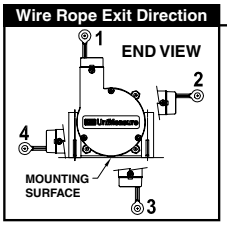

Ingress Protection

1 ..... IP-65 (NEMA 4X) dust and spraying water protection
2 ..... IP-52 (NEMA12) dust and dripping liquids

Output Polarity

S ..... Standard (Current increases as wire rope is extended)
R ..... Reversed (Current decreases as wire rope is extended)

Electrical Cable

N	No Electrical Cable (See note 1 below)
1	1 m (3') (See note 2 below)
2	2 m (6.5') (See note 2 below)
3	3 m (10') (See note 2 below)
4	4 m (13.5') (See note 2 below)
5	5 m (16.5') (See note 2 below)

Note:
1) Selection **N** applies to Electrical Connection option 3 only (3 pin connector with mating connector).

2) One of options **1** through **5** is required when Electrical Connection option 1 (Bulkhead Fitting) is selected or if electrical cable is required with mating connector when Electrical Connection option 3 (3 pin connector with mating connector) is required.

Electrical Cable Exit Location

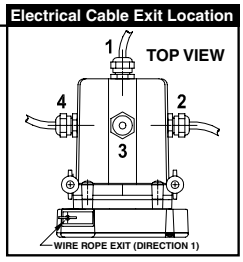

Electrical Connection

1 ..... Bulkhead fitting with electrical cable
3 ..... 3 pin connector with mating connector (electrical cable with connector optional)

Note: With option 1, electrical cable must be included. With option 3, mating connector may be ordered with or without electrical cable. See Electrical Cable options for cable lengths.

NOTE
1) Shaded options available at additional cost.

Example
JX-P420-25-N11-20S-31N

JX SERIES
SUPPLEMENTAL DATA

DIMENSIONAL INFORMATION

Ranges to 50" (1250 mm)

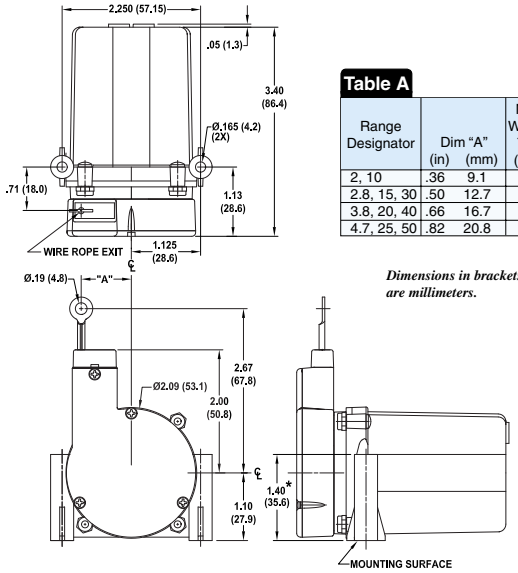

Table A

Range Designator	Dim "A" (in)	Dim "A" (mm)	Nominal Wire Rope Tension (oz)	Nominal Wire Rope Tension (N)
2, 10	.36	9.1	16	4.4
2.8, 15, 30	.50	12.7	14	3.9
3.8, 20, 40	.66	16.7	11	3.1
4.7, 25, 50	.82	20.8	8	2.2

Dimensions in brackets are millimeters.

Ranges 60" (1.5 m) and 80" (2 m)

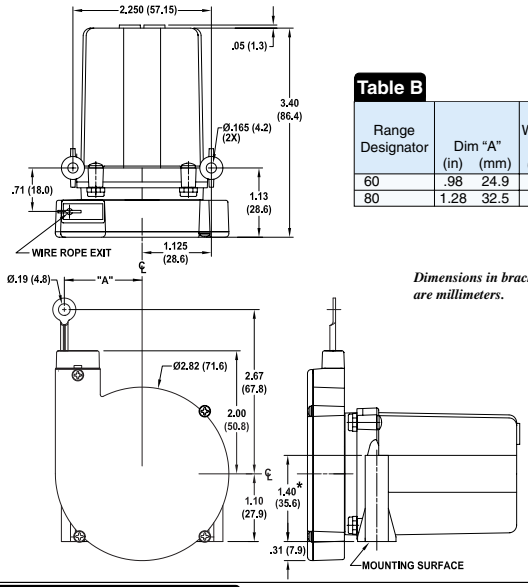

Table B

Range Designator	Dim "A" (in)	Dim "A" (mm)	Nominal Wire Rope Tension (oz)	Nominal Wire Rope Tension (N)
60	.98	24.9	10	2.8
80	1.28	32.5	8.6	2.4

Dimensions in brackets are millimeters.

TABLE 3—Electrical Output Options—JX-EP Series

Option	Output Type	Output Stage	Waveform
1	**5 VDC TTL Two Channel Current Sinking** Two channels in quadrature with 65KΩ internal pullup resistors. 5 VDC input voltage	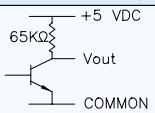	
2	**5 VDC TTL Current Sinking Differential Line Drive** Current sinking line drive output. 2KΩ internal pullup resistors. 5 VDC input voltage	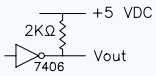	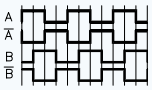
3	**5 VDC Push-Pull Differential Line Drive** Push-Pull, current sourcing and current sinking output. 5 VDC input voltage. Output is compliant with requirements of TIA/EIA-422-B.	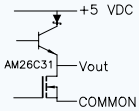	
4	**8 to 28 VDC Current Sinking Differential Line Drive** Current sinking line drive output with 10KΩ internal pullup resistors. 8 to 28 VDC input voltage	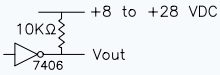	
5	**8 to 28 VDC Push-Pull Differential Line Drive** Push-Pull, current sourcing and current sinking output. 8 to 28 VDC input voltage.	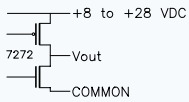	

Accessory—10067 Auxiliary Wire Rope Extension Kit

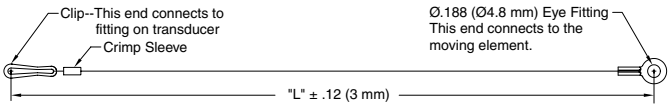

The auxiliary wire rope extension may be used to facilitate mounting the transducer remotely from the measurement point. The clip on the extension attaches to the eye fitting on the transducer. The eye fitting on the opposite end which is identical to the fitting on the transducer mounts to the moving element. The extension kit is also available with the clip end unterminated for situations where it is more convenient to size the wire rope length during installation. The clip and crimp sleeve are included as loose parts for user termination.

10067-__CM-__

- ✻..... Completed kit (no designator required)
- **U**..... Unterminated clip end (clip and crimp sleeve included in kit)
- ✻ Leave blank. No designator required.

Dimension "L"
Specify dimension "L" in centimeters to the **nearest whole centimeter.**

Note 1. 1 cm = 0.394", 1 inch = 2.54 cm
Note 2. Shortest length "L" is 5 cm (approximately 2").

PEWATRON
a member of the Angst + Pfister Group

We are here for you. Addresses and Contacts

Sales Switzerland

Postcode 3000 – 9999
Liechtenstein

Matthias Rüegg
Ruhbergstrasse 32
CH-9230 Flawil

Phone + 41 44 877 35 18
Mobile + 41 76 491 66 66
Fax + 41 44 877 35 19

matthias.rueegg@pewatron.com

Postcode 1000 – 2999

Raffael Favaretto
Route d'Oron 124
CH-1673 Promasens

Phone + 41 44 877 35 22
Mobile + 41 76 444 63 14
Fax + 41 44 877 35 23

raffael.favaretto@pewatron.com

Sales Germany

Postcode 60000 – 79999

Dieter Hirthe
Mühlweg 23
D-71554 Weissach i.T.

Phone + 49 719 149 60 58
Mobile + 49 163 762 74 30
Fax + 49 719 193 31 88

dieter.hirthe@pewatron.com

Postcode 10000 – 59999
Postcode 80000 – 99999

Kurt Stritzelberger
Neumarkter Str. 86a
D-81673 Munich

Phone + 49 89 260 38 47
Mobile + 49 171 803 41 35
Fax + 49 89 43 10 91 91

kurt.stritzelberger@pewatron.com

Key Accounts
Aerospace and Defence

Claus Wübbena
Vogelkamp 26
D-26655 Westerstede

Phone + 49 4488 5204 614
Mobile + 49 173 9700 691
Fax + 49 4488 5204 616

claus.wuebbena@pewatron.com

Sales Austria

Kurt Stritzelberger
Neumarkter Str. 86a
D-81673 Munich

Phone + 49 89 260 38 47
Mobile + 49 17 18 03 41 35
Fax + 49 89 43 10 91 91

kurt.stritzelberger@pewatron.com

Sales Other Countries / Product Management

Sensors

Physical Sensors
Data Acquisition

Peter Felder
Phone + 41 44 877 35 05
peter.felder@pewatron.com

Geometrical Sensors

Eric Letsch
Phone + 41 44 877 35 14
eric.letsch@pewatron.com

Power Supplies

DC-DC Converters
Switching Power Supplies
DC-AC Inverters

Sebastiano Leggio
Phone + 41 44 877 35 06
sebastiano.leggio@pewatron.com

E-Components

Current Sensors
Man Machine Interface
Measurement Probes

Sebastiano Leggio
Phone + 41 44 877 35 06
sebastiano.leggio@pewatron.com

PEWATRON AG
Thurgauerstrasse 66
CH-8052 Zurich

Phone + 41 44 877 35 00
Fax + 41 44 877 35 25

www.pewatron.com
info@pewatron.com