P420 SERIES
4-20 mA ANALOG OUTPUT

Two wire 4-20 mA Transmitter

The P420 position transducer provides a 4 to 20 mA output signal using a potentiometric sensor. Since the transmitter is loop powered, an assembled system consists of a power supply, current monitor, and transmitter all connected in series. The P420 is particularly insensitive to electrically noisy environments. Zero and span adjustments allow setting the 4 mA position within the first 30% of total travel and setting the 20 mA position within 80% to 100% of total travel. The devices may be powered by a supply voltage in the range of 9 to 35 VDC and with a total loop resistance per the graph below.

SPECIFICATIONS

General

Linearity	
2", 3", 4" & 5" Ranges	±0.30% Full Scale
10", 15", 20" & 25" Ranges	±0.20% Full Scale
All other ranges	±0.15% Full Scale
Repeatability[1]	±0.015% Full Scale
Resolution	Essentially Infinite
Construction	Aluminum Cover & Baseplate
Sensing Device	Precision Potentiometer
Connector	MS3102A-14S-6P
Wire Rope	Ø.016 Stainless Steel
Wire Rope Tension	See Supplemental Data[3], Table 7
Wire Rope Inbound Acceleration	See Supplemental Data[3], Table 7
Weight	1.0 lb. (0.45 Kg) to 50" 1.4 lb. (0.63 Kg) 60" & 80"
Dimensional Information	See Supplemental Data[3], Fig. 1 & 2
Options and Accessories	See Supplemental Data[3]

Environmental

Thermal Coefficient of sensing element	±100 PPM/°C max.
Operating temperature	-40°C to +95°C
Operating humidity	95% R.H. max. non-condensing
Vibration	15 G's 0.1 ms max.
Shock	50 G's 0.1 ms max.
Ingress Protection	NEMA 1, IP-40

Electrical

Output	4 to 20 mA
Load Resistance (Total Loop)	See Graph Below
Excitation Voltage	9 to 35 VDC[2]
Min. Supply Voltage	(.02 x Load Res.) + 9 VDC
Insulation resistance	100 Megohms min. at 100 VDC
Adjustment Range	
Zero	0 to 30% of Range
Span	80% to 100% of Range
Protection	Reversed Polarity

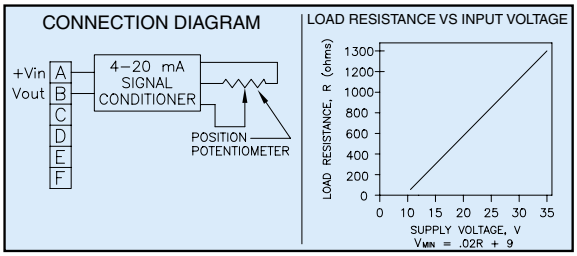

FOOTNOTES TO SPECIFICATIONS
1. Moving to the same position from the same direction.
2. Voltage required at transducer.
3. Supplemental Data section located at end of Standard Series pages.

Model Number Configuration

P420-__ - __ - __ - __ - __ - __ - __ - __

Range

2	2" (50 mm)
3	3" (75 mm)
4	4" (100 mm)
5	5" (125 mm)
10	10" (250 mm)
15	15" (390 mm)
20	20" (500 mm)
25	25" (640 mm)
30	30" (750 mm)
40	40" (1000 mm)
50	50" (1250 mm)
60	60" (1500 mm)
80	80" (2000 mm)

Wire Rope

✻	Ø.016 (0,4 mm) Stainless Steel
NJC	Ø.018 (0,45 mm) Nylon Jacketed Stainless Steel

Wire Rope Tension

✻	Standard (50 G units to 50")
004	Reduced (see Table 7 for value)
HG	Increased (100G on units with ranges from 2" to 50")

Wire Rope Exit Direction

✻	Top Exit
CES	Side Exit
CEB	Bottom Exit

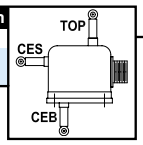

Dust Wiper Option

✻	No dust wiper
DS	Dust Wiper Installed

Electrical Interface

✻	Mating Connector Included
TS	Terminal Strip
L3M	Mating Conn with 3 m (10') electrical cable
L4M	Mating Conn with 4 m (13.5') electrical cable
L5M	Mating Conn with 5 m (16.5') electrical cable
L6M	Mating Conn with 6 m (20') electrical cable
L7M	Mating Conn with 7 m (23') electrical cable

Connector Location

✻	Standard Location
S3	Rear Side

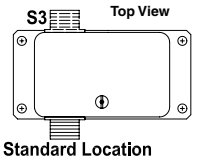

Electrical Output Polarity

✻	Standard (increasing output as wire rope is extended)
R	Reversed (decreasing output as wire rope is extended)

NOTE
1) ✻—Asterisk items are standard configuration. No option designator is required.
2) Shaded options available at additional cost.
3) See Supplemental Data for options.

Example
P420-50-NJC-R-S3

STANDARD SERIES
SUPPLEMENTAL DATA

ADDITIONAL OPTIONS

OPTION	OPTION DESIGNATOR	DESCRIPTION
Nylon jacketed wire rope	**NJC**	Replaces standard stainless steel wire rope with Ø.018 nylon jacketed wire rope. Increases wire rope life dramatically but may increase non-linearity by as much as ±0.05% of full scale.
Reduced Wire Rope Tension	**004**	Reduces the overall tension in the wire rope and increases wire rope life. Dynamic response of the transducer is reduced due to the reduced inbound acceleration capability.
Increased Wire Rope Tension	**HG**	Increases tension in the wire rope which increases the dynamic response of the transducer. On selected units with range of 50" (1250 mm) or less, inbound acceleration capability is 100G's. Wire rope life may be adversely affected by the HG option.
Dust wiper	**DS**	Lubricated wiper strips dust and debris from wire rope as it retracts into case. Adds 0.36" (9 mm) height to wire rope exit location.
Terminal strip	**TS**	Replaces connector with a terminal strip.
Reversed output	**R**	Output is at a maximum when wire rope is fully retracted. Output decreases as wire rope is extended. Does not apply to velocity signal.
Non-standard potentiometer (applies to PA series only)	**PXK**	Replace "X" in option designator with required potentiometer value in K ohms. Non-standard potentiometer linearity is as follows: Ranges 0 to 2" to 0 to 5".....±1.00% of full scale Ranges 0 to 10" to 0 to 25".....±0.50% of full scale Ranges 30" and above.....±0.25% of full scale Note: This option is subject to potentiometer availability.

ACCESSORIES

10067 Auxiliary Wire Rope Extension Kit

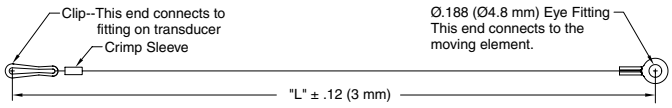

The auxiliary wire rope extension may be used to facilitate mounting the transducer remotely from the measurement point. The clip on the extension attaches to the eye fitting on the transducer. The eye fitting on the opposite end which is identical to the fitting on the transducer mounts to the moving element. The extension kit is also available with the clip end unterminated for situations where it is more convenient to size the wire rope length during installation. The clip and crimp sleeve are included as loose parts for user termination.

Dimension "L"
Specify dimension "L" in centimeters to the **nearest whole centimeter.**
Note 1. 1 cm = 0.394", 1 inch = 2.54 cm
Note 2. Shortest length "L" is 5 cm (approximately 2").

10067-__CM-__

✻..... Completed kit (no designator required)
U..... Unterminated clip end (clip and crimp sleeve included in kit)

✻ Leave blank. No designator required.

Replacement Wire Rope Kit

The replacement Wire Rope Kit includes a new wire rope with all end terminations, wire rope guide, felt dust wiper where applicable and installation instructions. To order, replace 'xx' in the part number with the applicable measurement range in inches.

10107-xx Replacement Wire Rope Kit—Standard Ø.016" stainless steel wire rope.
10108-xx Replacement Wire Rope Kit—NJC option, Ø.018" nylon jacketed stainless steel wire rope.
10127-xx Replacement Wire Rope Kit—DS option, Standard Ø.016" stainless steel wire rope with dust wiper.
10128-xx Replacement Wire Rope Kit—NJC and DS options, Ø.018" nylon jacketed stainless steel wire rope with dust wiper.

STANDARD SERIES
SUPPLEMENTAL DATA

ADDITIONAL SPECIFICATIONS

TABLE 7

PA, PB, P420, P510, P1010 SERIES									EP Series			V & VP Series		
Range Designator	Range (in)	Range (mm)	Wire Rope Standard Tension (Nominal) (oz)	(N)	Wire Rope Standard Acceleration (G's)	Wire Rope Reduced Tension (004 option) (oz)	(N)	Wire Rope Reduced Acceleration (004 option) (G's)	Wire Rope Reduced Tension (004 option) (oz)	(N)	Wire Rope Reduced Acceleration (004 option) (G's)	Wire Rope Reduced Tension (004 option) (oz)	(N)	Wire Rope Reduced Acceleration (004 option) (G's)
2	2	50	34	9.5	>50	16	4.4	28	—		—	16	4.4	14
3	3	75	24	6.7	>50	14	3.9	16	—		—	14	3.9	15
4	4	100	24	6.7	>50	11	3.1	12	—		—	11	3.1	15
5	5	125	34	9.5	>50	8	2.2	7	—		—	8	2.2	6
10	10	250	34	9.5	>50	16	4.4	28	16	4.4	19	16	4.4	14
15	15	390	24	6.7	>50	14	3.9	16	—		—	14	3.9	15
20	20	500	24	6.7	>50	11	3.1	12	—		—	11	3.1	14
25	25	640	34	9.5	>50	8	2.2	7	8	2.2	7	8	2.2	6
30	30	750	24	6.7	>50	14	3.9	16	—		—	14	3.9	15
40	40	1000	24	6.7	>50	11	3.1	12	—		—	11	3.1	12
50	50	1250	34	9.5	>50	8	2.2	7	8	2.2	7	8	2.2	5
60	60	1500	24	6.7	27	7	1.8	2	7	1.8	5	7	1.8	6
80	80	2000	19	5.3	16	5	1.4	2	5	1.4	2	5	1.4	3

DIMENSIONAL INFORMATION

PA, PB, P420, P510, P1010, EP & V Series

RANGES TO 50" (1250 mm)

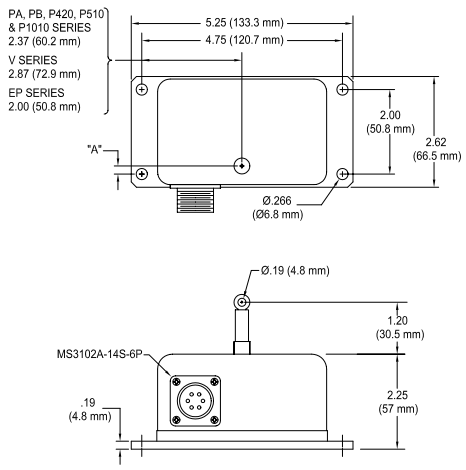

PA, PB, P420, P510, P1010, V Series		
RANGE	"A" (in)	(mm)
2", 10"	0.66	16.8
3", 15", 30"	0.51	12.9
4", 20", 40"	0.35	8.8
5", 25", 50"	0.19	4.8
60"	See Figure 2	
80"	See Figure 2	

EP Series		
MODEL	"A" (in)	(mm)
EP-10	0.68	17.4
EP-25, EP-50	0.21	5.3
EP-60	See Figure 2	
EP-80	See Figure 2	
EPM-250	0.68	17.4
EPM-1250	0.21	5.3

Figure 1

RANGES TO 60" (1500 mm) and 80" (2000 mm)

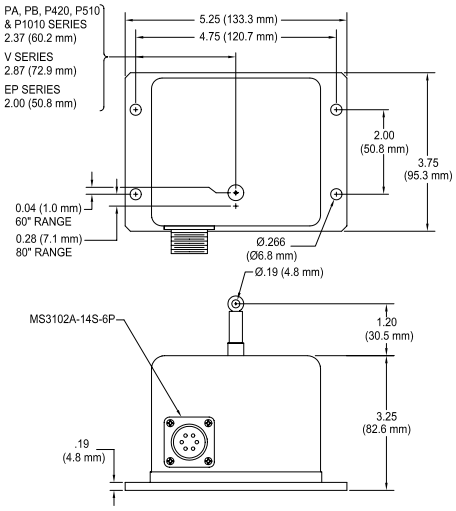

Figure 2

PEWATRON
a member of the Angst + Pfister Group

We are here for you. Addresses and Contacts

Sales Switzerland

Postcode 3000 – 9999
Liechtenstein

Matthias Rüegg
Ruhbergstrasse 32
CH-9230 Flawil

Phone + 41 44 877 35 18
Mobile + 41 76 491 66 66
Fax + 41 44 877 35 19

matthias.rueegg@pewatron.com

Postcode 1000 – 2999

Raffael Favaretto
Route d'Oron 124
CH-1673 Promasens

Phone + 41 44 877 35 22
Mobile + 41 76 444 63 14
Fax + 41 44 877 35 23

raffael.favaretto@pewatron.com

Sales Germany

Postcode 60000 – 79999

Dieter Hirthe
Mühlweg 23
D-71554 Weissach i.T.

Phone + 49 719 149 60 58
Mobile + 49 163 762 74 30
Fax + 49 719 193 31 88

dieter.hirthe@pewatron.com

Postcode 10000 – 59999
Postcode 80000 – 99999

Kurt Stritzelberger
Neumarkter Str. 86a
D-81673 Munich

Phone + 49 89 260 38 47
Mobile + 49 171 803 41 35
Fax + 49 89 43 10 91 91

kurt.stritzelberger@pewatron.com

Key Accounts
Aerospace and Defence

Claus Wübbena
Vogelkamp 26
D-26655 Westerstede

Phone + 49 4488 5204 614
Mobile + 49 173 9700 691
Fax + 49 4488 5204 616

claus.wuebbena@pewatron.com

Sales Austria

Kurt Stritzelberger
Neumarkter Str. 86a
D-81673 Munich

Phone + 49 89 260 38 47
Mobile + 49 17 18 03 41 35
Fax + 49 89 43 10 91 91

kurt.stritzelberger@pewatron.com

Sales Other Countries / Product Management

Sensors

Physical Sensors
Data Acquisition

Peter Felder
Phone + 41 44 877 35 05
peter.felder@pewatron.com

Geometrical Sensors

Eric Letsch
Phone + 41 44 877 35 14
eric.letsch@pewatron.com

Power Supplies

DC-DC Converters
Switching Power Supplies
DC-AC Inverters

Sebastiano Leggio
Phone + 41 44 877 35 06
sebastiano.leggio@pewatron.com

E-Components

Current Sensors
Man Machine Interface
Measurement Probes

Sebastiano Leggio
Phone + 41 44 877 35 06
sebastiano.leggio@pewatron.com

PEWATRON AG
Thurgauerstrasse 66
CH-8052 Zurich

Phone + 41 44 877 35 00
Fax + 41 44 877 35 25

www.pewatron.com
info@pewatron.com