REF. NO: MPCL 95 CAT. PG68

REVISION					
C.O.N	SYM	DESCRIPTION	DATE	DRAWN	APPR'D

GENERAL:

MODEL CPP-60 IS A CONDUCTIVE PLASTIC POTENTIOMETER THAT FEATURES THE HIGHEST ACCURACY IN ALL OF MIDORI "GREEN POT" LINES. THE UNIT IS SUITABLE FOR APPLICATIONS REQUIRING ULTRA HIGH PERFORMANCE IN ACCURACY AND RELIABILITY.

ELECTRICAL SPECIFICATIONS:

ELECTRICAL ANGLE:	355°
TOTAL RESISTANCE:	1k, 2k, 5k, 10k and 20k OHMS
TOTAL RESISTANCE TOLERANCE:	±15%
LINEARITY (INDEPENDENT):	±0.05% (±0.02% AVAILABLE)
REPEATABILITY:	± 0.003%
POWER RATING:	4 WATTS @70°C
INSULATION RESISTANCE :	100 meg OHMS MIN. @ 1,000 Vdc
DIELECTRIC STRENGTH:	1,000 Vrms @50/60 Hz for 1 MINUTE

MECHANICAL SPECIFICATIONS:

MECHANICAL ANGLE:	360°
TORQUE:	24 g-cm (0.33 in-oz) MAX.
WEIGHT:	170 g (6 oz) NOM.
LIFE:	10 MILLION CYCLES MIN.
GANGING:	2 MAX.

ENVIRONMENTAL SPECIFICATIONS:

OPERATING TEMPERATURE:	-40°C to +120°C
VIBRATIONS:	15 Gs, 2,000 Hz
SHOCK:	50Gs, 11 mS

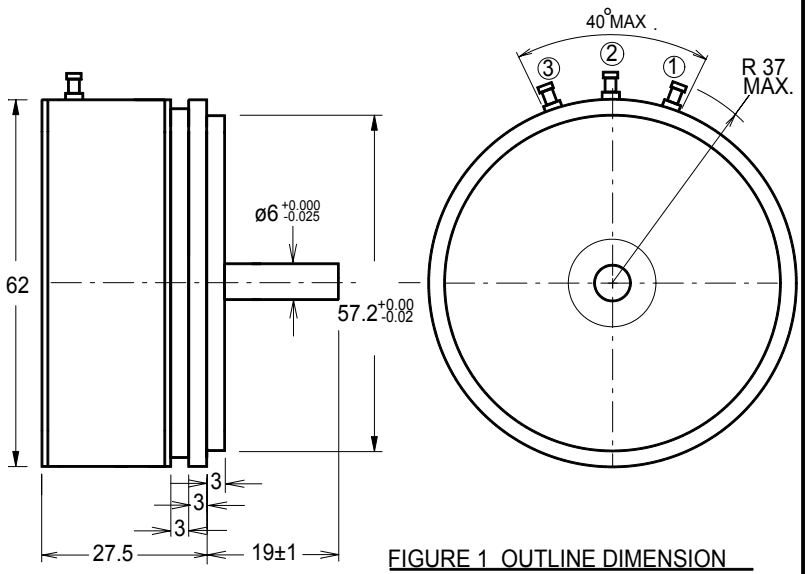

FIGURE 1 OUTLINE DIMENSION

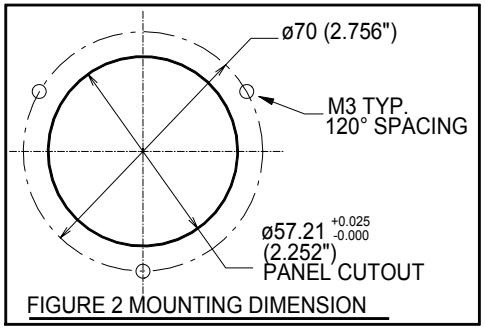

FIGURE 2 MOUNTING DIMENSION

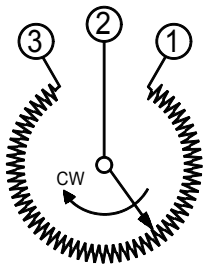

FIGURE 3 WIRING DIAGRAM

UNLESS OTHERWISE SPECIFIED,DIMENSIONS ARE IN mm(in).
TOLERANCES:

ANGLES	±1.5°
<10 mm:	±0.25
<100 mm:	±0.5
>100 mm:	±1

DRAWN T.TSUGAWA	DATE 01/05/97	SPECIFICATION DWG FOR MODEL CPP - 60 POTENTIOMETER	Midori America Corporation FULLERTON, CA
CHECKED	DATE		
APPROVED	DATE		A-MAC-B96
APPROVED	DATE		
SCALE:		FILE: CPP-60	1 OF 1

PEWATRON
a member of the Angst + Pfister Group

We are here for you. Addresses and Contacts

Sales Switzerland

Postcode 3000 – 9999
Liechtenstein

Matthias Rüegg
Ruhbergstrasse 32
CH-9230 Flawil

Phone + 41 44 877 35 18
Mobile + 41 76 491 66 66
Fax + 41 44 877 35 19

matthias.rueegg@pewatron.com

Postcode 1000 – 2999

Raffael Favaretto
Route d'Oron 124
CH-1673 Promasens

Phone + 41 44 877 35 22
Mobile + 41 76 444 63 14
Fax + 41 44 877 35 23

raffael.favaretto@pewatron.com

Sales Germany

Postcode 60000 – 79999

Dieter Hirthe
Mühlweg 23
D-71554 Weissach i.T.

Phone + 49 719 149 60 58
Mobile + 49 163 762 74 30
Fax + 49 719 193 31 88

dieter.hirthe@pewatron.com

Postcode 10000 – 59999
Postcode 80000 – 99999

Kurt Stritzelberger
Neumarkter Str. 86a
D-81673 Munich

Phone + 49 89 260 38 47
Mobile + 49 171 803 41 35
Fax + 49 89 43 10 91 91

kurt.stritzelberger@pewatron.com

Key Accounts
Aerospace and Defence

Claus Wübbena
Vogelkamp 26
D-26655 Westerstede

Phone + 49 4488 5204 614
Mobile + 49 173 9700 691
Fax + 49 4488 5204 616

claus.wuebbena@pewatron.com

Sales Austria

Kurt Stritzelberger
Neumarkter Str. 86a
D-81673 Munich

Phone + 49 89 260 38 47
Mobile + 49 171 803 41 35
Fax + 49 89 43 10 91 91

kurt.stritzelberger@pewatron.com

Sales Other Countries / Product Management

Sensors

Physical Sensors
Data Acquisition

Peter Felder
Phone + 41 44 877 35 05
peter.felder@pewatron.com

Geometrical Sensors

Eric Letsch
Phone + 41 44 877 35 14
eric.letsch@pewatron.com

Power Supplies

DC-DC Converters
Switching Power Supplies
DC-AC Inverters

Sebastiano Leggio
Phone + 41 44 877 35 06
sebastiano.leggio@pewatron.com

E-Components

Current Sensors
Man Machine Interface
Measurement Probes

Sebastiano Leggio
Phone + 41 44 877 35 06
sebastiano.leggio@pewatron.com

PEWATRON AG
Thurgauerstrasse 66
CH-8052 Zurich

Phone + 41 44 877 35 00
Fax + 41 44 877 35 25

www.pewatron.com
info@pewatron.com