Orange Pot α Contactless

Contactless Angle Sensor

〈RoHS Compliance〉

CP-45H

■ FEATURES

- Contactless rotary sensor, Combination of a magnet, Hall Effect Sensing Element and Custom IC
- Excellent absolute linearity
- Superb temperature characteristic
- Wide angle
- Long useful life

Electrical Specifications

Electrical Angle	360°
Output Range	5～95%Vin
Absolute Linearity	±0.4%FS(Ind.Linearity:±0.2%FS)
Input Voltage	DC 5±0.5V
Load Resistance	1MΩMIN.
Supply Current	30mA MAX.
Resolution	0.1°MAX.(400rpm MAX.)
Hysteresis	±0.5°(±0.14%FS=360°)
Temp. Characteristics −40℃～100℃ (Reference Temp. 25℃)	±0.3%FS(=±1.08°) FS=360°

Mechanical Specifications

Mechanical Angle	360° Endless
Torque	1.8mN·m MAX.
Weight	Approx. 80g
Shaft radial load	6N MAX.
Shaft thrust load	2N MAX.

Enviromental Specifications

Life Cycles	50M Cycle MIN.
Vibration	200m/s² 5～500Hz(6min) 3axis 2hours
Shock	1,000m/s² 11ms 6axis 3times
EMS(IEC 61000-4-2)	10V/m、80M～1GHz
Operating Temp.	-40～100℃
Storage Temp.	-40～100℃
ESD(Case～Each Terminal)	±8kV(IEC 61000-4-2)
ESD(Each Terminal)	±8kV(IEC 61000-4-2)
IP Level	IP40

OPTIONS

- Electrical angle: 300°,200°
- Drip-proof：IP65

HANDLING INSTRUCTION

- In applying input power, voltage Vin must rise to 4.5V within 0.2 seconds, otherwise, output shall be disabled(Vout=0V)
- This product may be influenced from external magnetic field of apparatus which generates a magnetic field.
- Use this sensor in the place where is protected from ESD.

■ DIMENSION (mm)

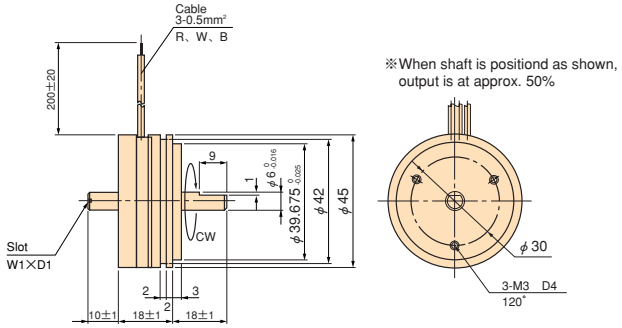

■ MOUNTING

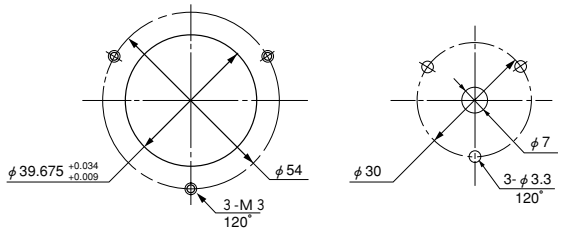

Servo Mount　　Screw Mount

■ SCHEMATIC

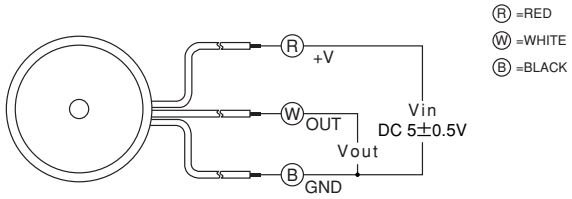

Red, White and Black indicate harness colors

■ OUTPUT CHARACTERISTICS

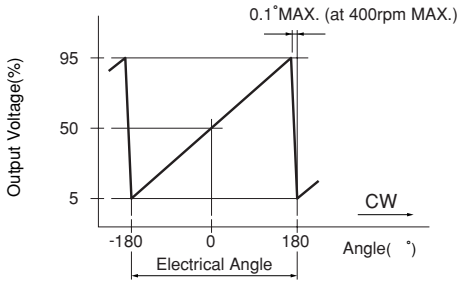

■MOUNTING HARDWARE

Cleats : 3pcs

PEWATRON
a member of the Angst + Pfister Group

We are here for you. Addresses and Contacts

Sales Switzerland

Postcode 3000 – 9999
Liechtenstein

Matthias Rüegg
Ruhbergstrasse 32
CH-9230 Flawil

Phone + 41 44 877 35 18
Mobile + 41 76 491 66 66
Fax + 41 44 877 35 19

matthias.rueegg@pewatron.com

Postcode 1000 – 2999

Raffael Favaretto
Route d'Oron 124
CH-1673 Promasens

Phone + 41 44 877 35 22
Mobile + 41 76 444 63 14
Fax + 41 44 877 35 23

raffael.favaretto@pewatron.com

Sales Germany

Postcode 60000 – 79999

Dieter Hirthe
Mühlweg 23
D-71554 Weissach i.T.

Phone + 49 719 149 60 58
Mobile + 49 163 762 74 30
Fax + 49 719 193 31 88

dieter.hirthe@pewatron.com

Postcode 10000 – 59999
Postcode 80000 – 99999

Kurt Stritzelberger
Neumarkter Str. 86a
D-81673 Munich

Phone + 49 89 260 38 47
Mobile + 49 171 803 41 35
Fax + 49 89 43 10 91 91

kurt.stritzelberger@pewatron.com

Key Accounts
Aerospace and Defence

Claus Wübbena
Vogelkamp 26
D-26655 Westerstede

Phone + 49 4488 5204 614
Mobile + 49 173 9700 691
Fax + 49 4488 5204 616

claus.wuebbena@pewatron.com

Sales Austria

Kurt Stritzelberger
Neumarkter Str. 86a
D-81673 Munich

Phone + 49 89 260 38 47
Mobile + 49 17 18 03 41 35
Fax + 49 89 43 10 91 91

kurt.stritzelberger@pewatron.com

Sales Other Countries / Product Management

Sensors

Physical Sensors
Data Acquisition

Peter Felder
Phone + 41 44 877 35 05
peter.felder@pewatron.com

Geometrical Sensors

Eric Letsch
Phone + 41 44 877 35 14
eric.letsch@pewatron.com

Power Supplies

DC-DC Converters
Switching Power Supplies
DC-AC Inverters

Sebastiano Leggio
Phone + 41 44 877 35 06
sebastiano.leggio@pewatron.com

E-Components

Current Sensors
Man Machine Interface
Measurement Probes

Sebastiano Leggio
Phone + 41 44 877 35 06
sebastiano.leggio@pewatron.com

PEWATRON AG
Thurgauerstrasse 66
CH-8052 Zurich

Phone + 41 44 877 35 00
Fax + 41 44 877 35 25

www.pewatron.com
info@pewatron.com