OUTLINE DIMENSIONS

THIS PRODUCT COMPLIES WITH RoHS DIRECTIVE.

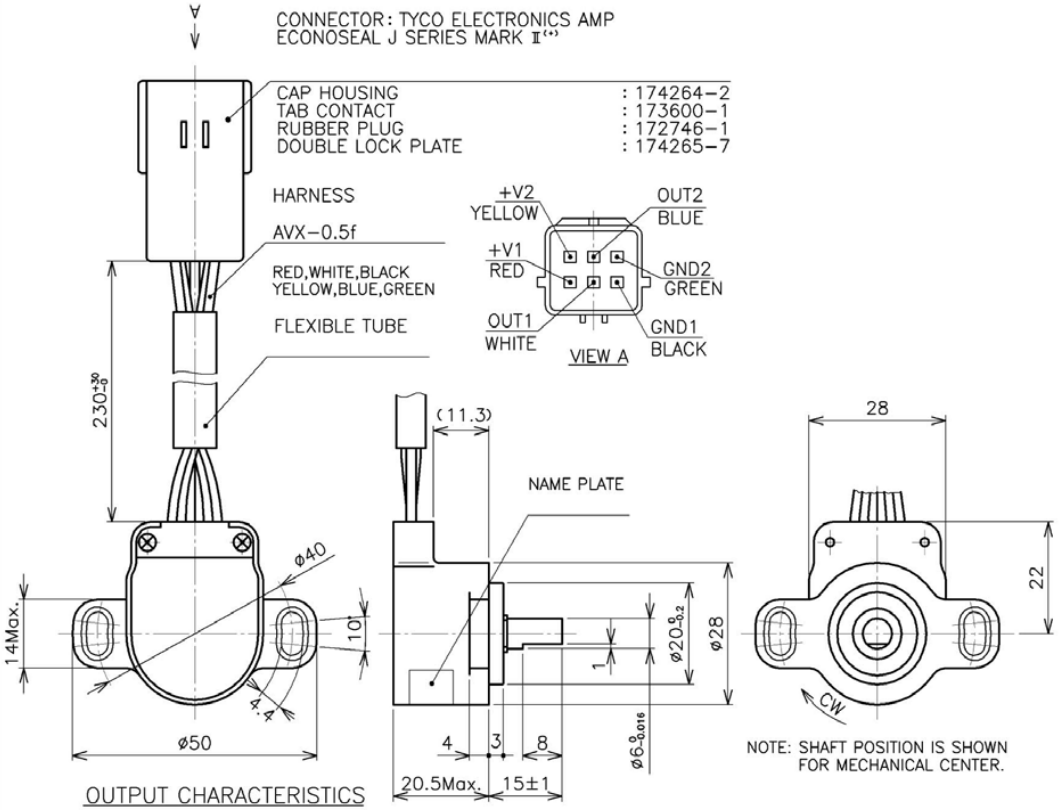

SCHEMATIC

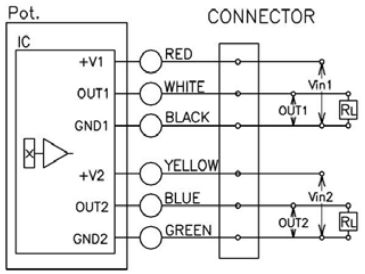

・RED,WHITE,BLACK,YELLOW,BLUE AND GREEN INDICATE HARNESS COLORS

SPECIFICATIONS

ELECTRICAL TRAVEL	:	±175°
OUTPUT CHARACTERISTIC	:	SEE FIGURE
ABSOLUTE LINEARITY	:	±1%FS
HYSTERESIS	:	0.5°MAX.
TEMP. CHARACTERISTIC	:	±0.5%Vin −20 ~ 100℃ (REFERENCE TEMP. 25℃)
INPUT VOLTAGE	:	5±0.5 VDC
SUPPLY CURRENT	:	22 mA MAX.
RESOLUTION	:	12bit / 0~100 %Vin
LOAD RESISTANCE	:	10 kΩ MIN.
INSULATION RESISTANCE	:	100 MΩ MIN. DC50V
TOTAL MECHANICAL TRAVEL	:	360°CONTINUOUS
TORQUE	:	180 mN·m MAX.
MASS	:	APPROX. 40g
ALLOWABLE RADIAL SHAFT LOAD	:	4 N
ALLOWABLE AXIAL SHAFT LOAD	:	3 N
OPERATING TEMPERATURE	:	−20 ~ 100℃
STORAGE TEMPERATURE	:	−20 ~ 100℃
VIBRATION	:	110.7 m/s² 18~2000Hz 3AXIS 8h
SHOCK	:	294 m/s² 11ms 3AXIS 3TIMES
ESD	:	±6kV (IEC 61000-4-2)
EMS	:	100V/m 200MHz~1GHz (ISO 11452-2) 100V/m 10MHz~200MHz (ISO 11452-3)
WATER PROOF	:	IP65

OUTPUT CHARACTERISTICS

normal (parallel)

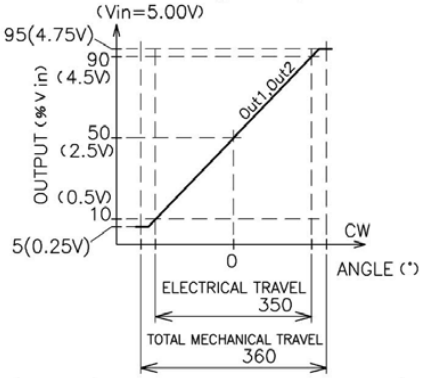

optional (crossed)

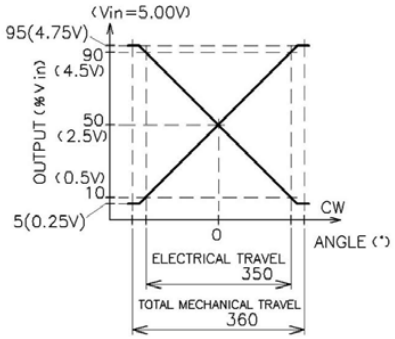

NOTE

1. AS THIS PRODUCT IS USING "CMOS IC",HANDLING OF HARNESS MUST BE DONE UNDER THE ESD PROTECTION.
2. THIS PRODUCT MAY HAVE EXTERNAL MAGNETIC INFLUENCE OF THE APPARATUS WHICH GENERATES A MAGNETIC FIELD.
3. WHEN THE SHAFT IS COUPLED, PLEASE DO NOT APPLY HEAVY LOAD TO IT.

REV.	DATE	DESCRIPTION	APPROVED	CHECKED	DRAWN
1					

A3

SPECIFICATION DRAWING					CUSTOMER/SPEC. NO.
MODEL: CP−2HA					
APPROVED T.Yamazaki	TOLERANCE		DATE Jul 14,'10	MIDORI PRECISIONS CO., LTD.	
CHECKED T.Yamazaki	≤10	±0.25	SCALE 1 : 1	DRAWING NO. A−C2H−B28	REV. 0
DRAWN Y.YOSHIZAWA	10< ≤100	±0.5	DRAWING PRACTICE		
	100<	±1.0			
	ANGLE	±1.5°			

PEWATRON
a member of the Angst + Pfister Group

We are here for you. Addresses and Contacts

Sales Switzerland

Postcode 3000 – 9999
Liechtenstein

Matthias Rüegg
Ruhbergstrasse 32
CH-9230 Flawil

Phone + 41 44 877 35 18
Mobile + 41 76 491 66 66
Fax + 41 44 877 35 19

matthias.rueegg@pewatron.com

Postcode 1000 – 2999

Raffael Favaretto
Route d'Oron 124
CH-1673 Promasens

Phone + 41 44 877 35 22
Mobile + 41 76 444 63 14
Fax + 41 44 877 35 23

raffael.favaretto@pewatron.com

Sales Germany

Postcode 60000 – 79999

Dieter Hirthe
Mühlweg 23
D-71554 Weissach i.T.

Phone + 49 719 149 60 58
Mobile + 49 163 762 74 30
Fax + 49 719 193 31 88

dieter.hirthe@pewatron.com

Postcode 10000 – 59999
Postcode 80000 – 99999

Kurt Stritzelberger
Neumarkter Str. 86a
D-81673 Munich

Phone + 49 89 260 38 47
Mobile + 49 171 803 41 35
Fax + 49 89 43 10 91 91

kurt.stritzelberger@pewatron.com

Key Accounts
Aerospace and Defence

Claus Wübbena
Vogelkamp 26
D-26655 Westerstede

Phone + 49 4488 5204 614
Mobile + 49 173 9700 691
Fax + 49 4488 5204 616

claus.wuebbena@pewatron.com

Sales Austria

Kurt Stritzelberger
Neumarkter Str. 86a
D-81673 Munich

Phone + 49 89 260 38 47
Mobile + 49 171 803 41 35
Fax + 49 89 43 10 91 91

kurt.stritzelberger@pewatron.com

Sales Other Countries / Product Management

Sensors

Physical Sensors
Data Acquisition

Peter Felder
Phone + 41 44 877 35 05
peter.felder@pewatron.com

Geometrical Sensors

Eric Letsch
Phone + 41 44 877 35 14
eric.letsch@pewatron.com

Power Supplies

DC-DC Converters
Switching Power Supplies
DC-AC Inverters

Sebastiano Leggio
Phone + 41 44 877 35 06
sebastiano.leggio@pewatron.com

E-Components

Current Sensors
Man Machine Interface
Measurement Probes

Sebastiano Leggio
Phone + 41 44 877 35 06
sebastiano.leggio@pewatron.com

PEWATRON AG
Thurgauerstrasse 66
CH-8052 Zurich

Phone + 41 44 877 35 00
Fax + 41 44 877 35 25

www.pewatron.com
info@pewatron.com