Green Pot — Conductive Plastic Angle Sensor

〈RoHS Compliance〉

CP-2F-10S-RB

■ FEATURES

- Multi-Turn Potentiometer
- Setting CP-element and Anti-Backlash gears in a compact package
- Ball bearing
- Reliable wide angle positon sensing solution

■ DIMENSION (mm)

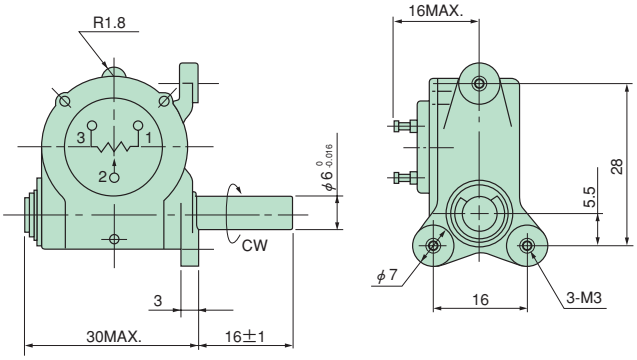

■ Electrical Specifications

Electrical Angle	3400° +20° −30°
Total Resistance	1、2、5kΩ
Total Resistance Tolerance	±20%
Independent Linearity	±1.5%(Including Backlash)
Power Rating	0.5W／50℃
Output Smoothness	0.1%MAX.
Insulation Resistance	100MΩMIN. DC 1000V
Dielectric Strength	AC 1000V 1 Minute
TC of Resistance	±400ppm／℃

■ Mechanical Specifications

Gear Ratio	10：1
Torque	4mN･mMAX.
Repeatability	0.5% MAX. (Including Backlash)
Weight	Approx. 30g
Radial Load	5N MAX.
Thrust Load	3N MAX.

■ Enviromental Specifications

Operating Temperature	−40～100℃

■ MOUNTING

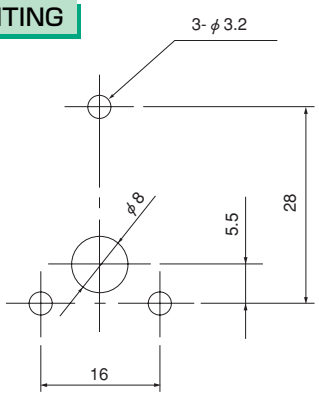

■ SCHEMATIC

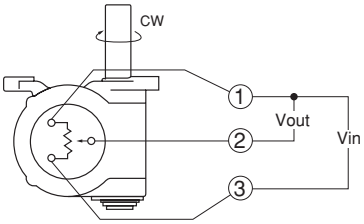

1,2,3 indicate terminal No.

■ OUTPUT CHARACTERISTICS

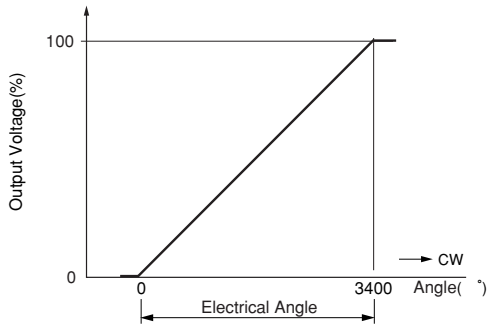

OPTIONS

- Shaft D-cut type: CP-2F-10S-RB-1

PEWATRON
a member of the Angst + Pfister Group

We are here for you. Addresses and Contacts

Sales Switzerland

Postcode 3000 – 9999
Liechtenstein

Matthias Rüegg
Ruhbergstrasse 32
CH-9230 Flawil

Phone + 41 44 877 35 18
Mobile + 41 76 491 66 66
Fax + 41 44 877 35 19

matthias.rueegg@pewatron.com

Postcode 1000 – 2999

Raffael Favaretto
Route d'Oron 124
CH-1673 Promasens

Phone + 41 44 877 35 22
Mobile + 41 76 444 63 14
Fax + 41 44 877 35 23

raffael.favaretto@pewatron.com

Sales Germany

Postcode 60000 – 79999

Dieter Hirthe
Mühlweg 23
D-71554 Weissach i.T.

Phone + 49 719 149 60 58
Mobile + 49 163 762 74 30
Fax + 49 719 193 31 88

dieter.hirthe@pewatron.com

Postcode 10000 – 59999
Postcode 80000 – 99999

Kurt Stritzelberger
Neumarkter Str. 86a
D-81673 Munich

Phone + 49 89 260 38 47
Mobile + 49 171 803 41 35
Fax + 49 89 43 10 91 91

kurt.stritzelberger@pewatron.com

Key Accounts
Aerospace and Defence

Claus Wübbena
Vogelkamp 26
D-26655 Westerstede

Phone + 49 4488 5204 614
Mobile + 49 173 9700 691
Fax + 49 4488 5204 616

claus.wuebbena@pewatron.com

Sales Austria

Kurt Stritzelberger
Neumarkter Str. 86a
D-81673 Munich

Phone + 49 89 260 38 47
Mobile + 49 17 18 03 41 35
Fax + 49 89 43 10 91 91

kurt.stritzelberger@pewatron.com

Sales Other Countries / Product Management

Sensors

Physical Sensors
Data Acquisition

Peter Felder
Phone + 41 44 877 35 05
peter.felder@pewatron.com

Geometrical Sensors

Eric Letsch
Phone + 41 44 877 35 14
eric.letsch@pewatron.com

Power Supplies

DC-DC Converters
Switching Power Supplies
DC-AC Inverters

Sebastiano Leggio
Phone + 41 44 877 35 06
sebastiano.leggio@pewatron.com

E-Components

Current Sensors
Man Machine Interface
Measurement Probes

Sebastiano Leggio
Phone + 41 44 877 35 06
sebastiano.leggio@pewatron.com

PEWATRON AG
Thurgauerstrasse 66
CH-8052 Zurich

Phone + 41 44 877 35 00
Fax + 41 44 877 35 25

www.pewatron.com
info@pewatron.com