Green Pot

Conductive Plastic Angle Sensor

〈RoHS Compliance〉

# CPP-45-10SX

## ■ FEATURES

- Multi turns
- Setting CPP-45 and Anti-Backlush gears in an alminum die-casitng housing

## ■ DIMENSION (mm)

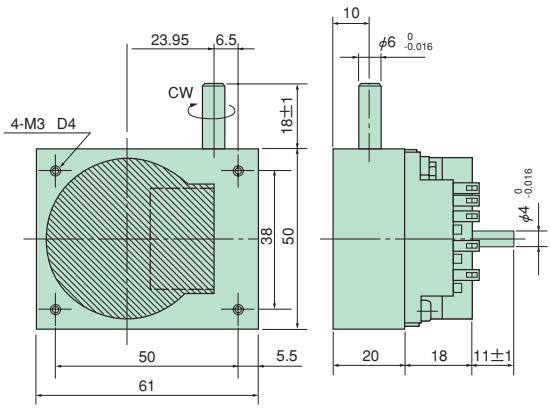


## ■ Electrical Specifications

| | |
|---|---|
| **Electrical Angle** | 3500° +20° −30° |
| **Total Resistance** | 0.5、1、2、5、10、20kΩ |
| **Total Resistance Tolerance** | ±15% |
| **Independent Linearity** | ±0.3% |
| **Power Rating** | 3W／70℃ |
| **Output Smoothness** | 0.1%MAX. |
| **Insulation Resistance** | 100MΩMIN. DC 1000V |
| **Dielectric Strength** | AC 1000V 1 Minute |
| **TC of Resistance** | ±400ppm／℃ |

## ■ Mechanical Specifications

| | |
|---|---|
| **Gear Ratio** | 10：1 |
| **Torque** | 4mN·m MAX. |
| **Repeatability** | 0.03% MAX. (Including Backlash) |
| **Weight** | Approx. 220g |
| **Radial Load** | 16N MAX. |
| **Thrust Load** | 5N MAX. |

## ■ Enviromental Specifications

| | |
|---|---|
| **Operating Temperature** | −40～125℃ |

## OPTIONS

- Independent Linearity : ±0.1%
- Gear ratio

| Gear ratio | Model No. |
|---|---|
| 24：1 | CPP-45-24SX |
| 35：1 | CPP-45-35SX |
| 60：1 | CPP-45-60SX |
| 100：1 | CPP-45-100SX |

## ■ MOUNTING

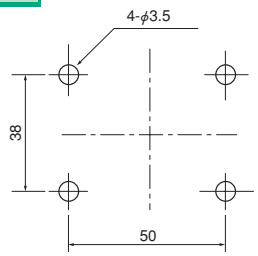


## ■ SCHEMATIC

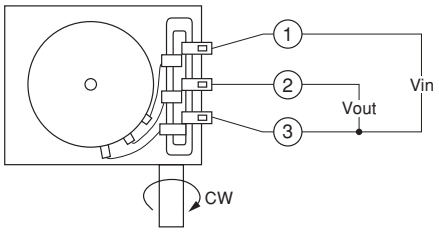


1,2,3 indicate terminal No.

## ■ OUTPUT CHARACTERISTICS

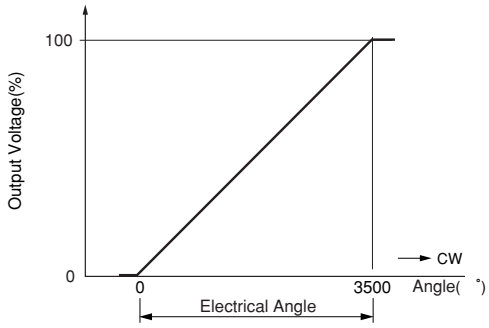

PEWATRON
a member of the Angst + Pfister Group

# We are here for you. Addresses and Contacts

## Sales Switzerland

Postcode 3000 – 9999
Liechtenstein

Matthias Rüegg
Ruhbergstrasse 32
CH-9230 Flawil

Phone + 41 44 877 35 18
Mobile + 41 76 491 66 66
Fax + 41 44 877 35 19

matthias.rueegg@pewatron.com

Postcode 1000 – 2999

Raffael Favaretto
Route d'Oron 124
CH-1673 Promasens

Phone + 41 44 877 35 22
Mobile + 41 76 444 63 14
Fax + 41 44 877 35 23

raffael.favaretto@pewatron.com

## Sales Germany

Postcode 60000 – 79999

Dieter Hirthe
Mühlweg 23
D-71554 Weissach i.T.

Phone + 49 719 149 60 58
Mobile + 49 163 762 74 30
Fax + 49 719 193 31 88

dieter.hirthe@pewatron.com

Postcode 10000 – 59999
Postcode 80000 – 99999

Kurt Stritzelberger
Neumarkter Str. 86a
D-81673 Munich

Phone + 49 89 260 38 47
Mobile + 49 171 803 41 35
Fax + 49 89 43 10 91 91

kurt.stritzelberger@pewatron.com

Key Accounts
Aerospace and Defence

Claus Wübbena
Vogelkamp 26
D-26655 Westerstede

Phone + 49 4488 5204 614
Mobile + 49 173 9700 691
Fax + 49 4488 5204 616

claus.wuebbena@pewatron.com

## Sales Austria

Kurt Stritzelberger
Neumarkter Str. 86a
D-81673 Munich

Phone + 49 89 260 38 47
Mobile + 49 17 18 03 41 35
Fax + 49 89 43 10 91 91

kurt.stritzelberger@pewatron.com

## Sales Other Countries / Product Management

### Sensors

Physical Sensors
Data Acquisition

Peter Felder
Phone + 41 44 877 35 05
peter.felder@pewatron.com

Geometrical Sensors

Eric Letsch
Phone + 41 44 877 35 14
eric.letsch@pewatron.com

### Power Supplies

DC-DC Converters
Switching Power Supplies
DC-AC Inverters

Sebastiano Leggio
Phone + 41 44 877 35 06
sebastiano.leggio@pewatron.com

### E-Components

Current Sensors
Man Machine Interface
Measurement Probes

Sebastiano Leggio
Phone + 41 44 877 35 06
sebastiano.leggio@pewatron.com

PEWATRON AG
Thurgauerstrasse 66
CH-8052 Zurich

Phone + 41 44 877 35 00
Fax + 41 44 877 35 25

www.pewatron.com
info@pewatron.com