THIS PRODUCT COMPLIES WITH RoHS DIRECTIVE.

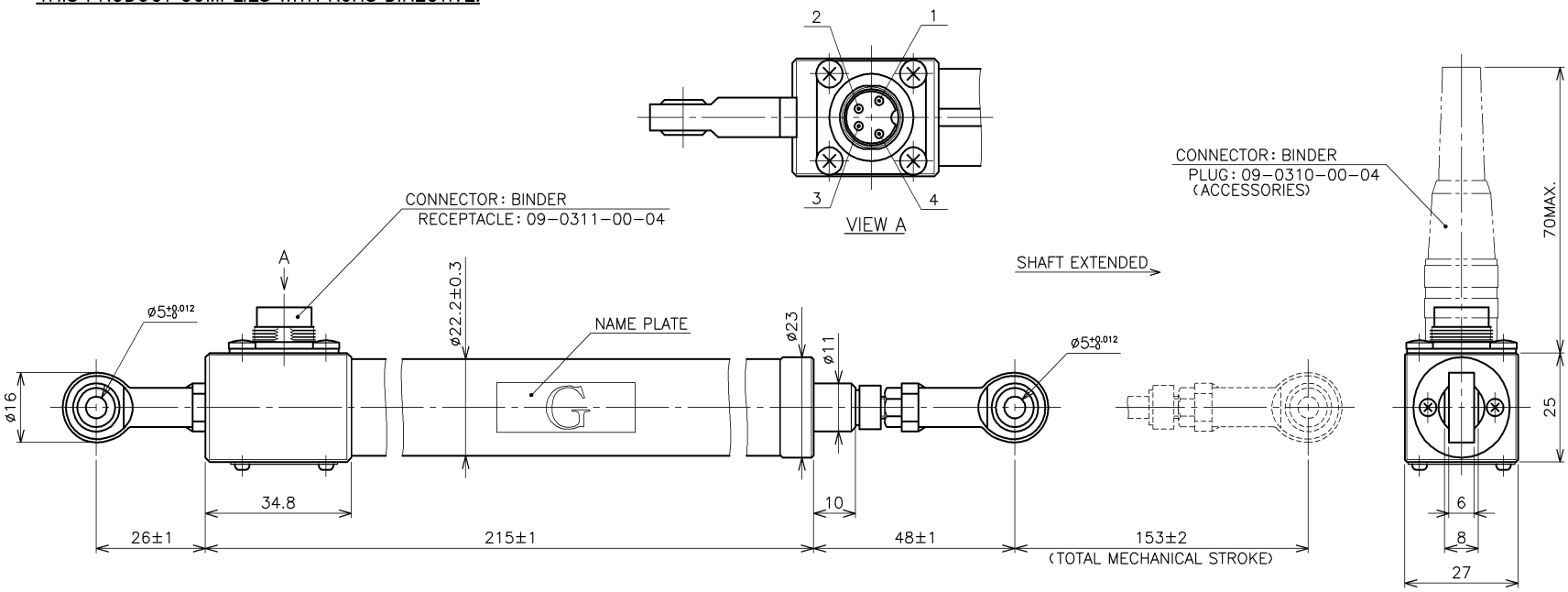

SPECIFICATIONS

ELECTRICAL STROKE	:	150±1mm
TOTAL RESISTANCE	:	1・2・5・10kΩ ±20%
INDEPENDENT LINEARITY	:	±0.3% (AVAILABLE: ±0.1%)
POWER RATING	:	3W/70℃
OUTPUT SMOOTHNESS	:	0.1% MAX.
INSULATION RESISTANCE	:	100MΩ MIN. DC500V
DIELECTRIC STRENGTH	:	AC500V 1MINUTE
TEMPERATURE COEFFICIENT OF RESISTANCE	:	±400ppm/K
TOTAL MECHANICAL STROKE	:	153±2mm
FRICTION	:	2N MAX.

SCHEMATIC

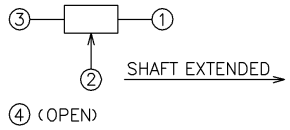

・1, 2, 3, 4: CONNECTOR PIN No.

NAME PLATE

REV	DATE	DESCRIPTION	DRAWN	CHKD
1				

DRAWING FOR APPROVAL				SPEC. NO.
MODEL: LP-150F-13				
APPROVED	TOLERANCE	DATE 1.27.'10		MIDORI PRECISIONS CO., LTD.
CHECKED M. Hamiki	≤10 ±0.25 10< ≤100 ±0.5	SCALE 1:1		DRAWING NO.
DRAWN K. Yoshino	100< ±1.0 ANGLE ±1.5°	DRAWING PRACTICE		B-MPE-B95

PEWATRON
a member of the Angst + Pfister Group

We are here for you. Addresses and Contacts

Sales Switzerland

Postcode 3000 – 9999
Liechtenstein

Matthias Rüegg
Ruhbergstrasse 32
CH-9230 Flawil

Phone + 41 44 877 35 18
Mobile + 41 76 491 66 66
Fax + 41 44 877 35 19

matthias.rueegg@pewatron.com

Postcode 1000 – 2999

Raffael Favaretto
Route d'Oron 124
CH-1673 Promasens

Phone + 41 44 877 35 22
Mobile + 41 76 444 63 14
Fax + 41 44 877 35 23

raffael.favaretto@pewatron.com

Sales Germany

Postcode 60000 – 79999

Dieter Hirthe
Mühlweg 23
D-71554 Weissach i.T.

Phone + 49 719 149 60 58
Mobile + 49 163 762 74 30
Fax + 49 719 193 31 88

dieter.hirthe@pewatron.com

Postcode 10000 – 59999
Postcode 80000 – 99999

Kurt Stritzelberger
Neumarkter Str. 86a
D-81673 Munich

Phone + 49 89 260 38 47
Mobile + 49 171 803 41 35
Fax + 49 89 43 10 91 91

kurt.stritzelberger@pewatron.com

Key Accounts
Aerospace and Defence

Claus Wübbena
Vogelkamp 26
D-26655 Westerstede

Phone + 49 4488 5204 614
Mobile + 49 173 9700 691
Fax + 49 4488 5204 616

claus.wuebbena@pewatron.com

Sales Austria

Kurt Stritzelberger
Neumarkter Str. 86a
D-81673 Munich

Phone + 49 89 260 38 47
Mobile + 49 171 803 41 35
Fax + 49 89 43 10 91 91

kurt.stritzelberger@pewatron.com

Sales Other Countries / Product Management

Sensors

Physical Sensors
Data Acquisition

Peter Felder
Phone + 41 44 877 35 05
peter.felder@pewatron.com

Geometrical Sensors

Eric Letsch
Phone + 41 44 877 35 14
eric.letsch@pewatron.com

Power Supplies

DC-DC Converters
Switching Power Supplies
DC-AC Inverters

Sebastiano Leggio
Phone + 41 44 877 35 06
sebastiano.leggio@pewatron.com

E-Components

Current Sensors
Man Machine Interface
Measurement Probes

Sebastiano Leggio
Phone + 41 44 877 35 06
sebastiano.leggio@pewatron.com

PEWATRON AG
Thurgauerstrasse 66
CH-8052 Zurich

Phone + 41 44 877 35 00
Fax + 41 44 877 35 25

www.pewatron.com
info@pewatron.com