US DIGITAL **T7** **Networked Absolute Inclinometer**

RoHS COMPLIANT

Description

The T7 is a solid state absolute inclinometer that senses tilt angles over a full 360 ° range in a single axis. A multi-axis version is planned for the future. The T7 is sealed against dust and water (IP-67 rated) for operation in dirty environments. The T7 incorporates a number of breakthroughs to create a new type of inclinometer that is rugged, compact, fast, flexible and easy to use.

The T7 is available in several interface and protocol options. The physical interface can be RS232, RS485 or US Digital's CAN (Controller Area Network). The protocol can be either US Digital's serial protocol or Modbus. The RS232 version supports a single T7 with up to 100 ft of cable. For users that need longer cable lengths or multiple T7s on a single bus, the RS485 or US Digital CAN (Controller Area Network) version can be used. The USD-CAN protocol allows a network of up to sixty-four T7s to be connected to a single host. Power for each T7 is supplied over the CAN network cable. The host accesses the USD-CAN T7s through US Digital's low cost CANA-232/CANA-485 adapter module. This module allows the host to access each T7 on the network using simple, easy serial port commands, just like the RS232 version. The RS485 version supports up to 32 T7s on the bus.

The Modbus version is suitable for users that require an industry standard, open protocol. The host may access each T7 on the bus using standard Modbus read/write register function codes.

The T7 calculates tilt angle (inclination) by sensing the acceleration from solid state accelerometers integrated into a monolithic chip. Gravity, centrifugal forces, and linear speed changes are all forms of acceleration. The T7 will report the mathematically calculated tilt angle based on all sensed acceleration(s).

The serial port interface provides an efficient way to read and write data to a network of T7s. All configurations and parameters are stored in nonvolatile memory. A Windows demo application is provided for displaying the angles and temperature as well as setting operating modes, orientation, zero position, damping / averaging time, direction, and more for every T7 on the network. In addition, a Windows DLL gives the user a set of simple functions to read and write data to a network of T7s.

Typical applications include heavy construction equipment, dredging machinery, mining equipment, solar tracking and warehouse automation.

Features

- Solid state technology - no moving parts. Field programmable
- Full 360 ° range, temperature compensated from 0C to 70C
- ±0.1 ° accuracy, 0.01 ° resolution
- RS-485 or US Digital CAN interface versions allow multiple T7s to be networked
- RS485 version supports up to 1000 ft. (305m) of cable. USD-CAN version has 700 ft. (213 m) limit
- RS232 version supports up to 100 ft. (30 m) of cable
- Modbus version available
- Reports temperature
- Rugged, dustproof and waterproof (IP-67 rated) package
- Finalist in the 2010 Golden Mousetrap Best New Products awards

Related Products & Accessories

- CA-CFR-PS-DB9P T7-232 Power and Serial Communication Cable
- CA-CFR-PS-NC CAN-bus PUR Shielded Cable with Leads
- CA-CFTR-PS-NC CAN-bus PUR Shielded Cable with Leads (Terminating)
- CA-CM-PS-CFR CAN-Bus / RA CAN-Bus PUR Shielded Cable
- CA-CM-PS-CFTR CAN-Bus / RA CAN-Bus PUR Shielded Cable (Terminating)
- CANA CAN to Serial Port Adapter

- CON-CAN-MFF CAN-Bus Splitter 1M to 2F Connector

Mechanical Drawing

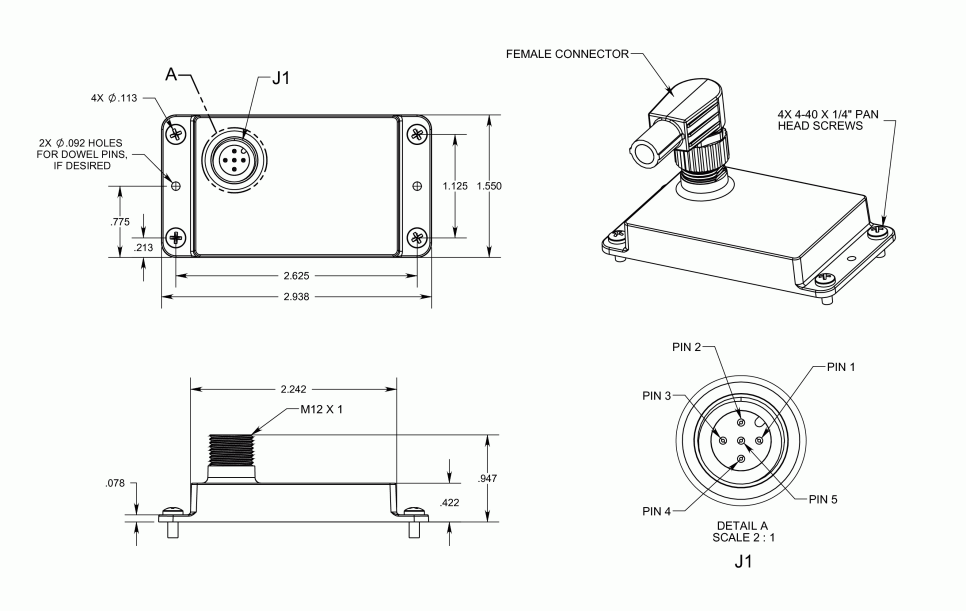

Operating Conditions

Parameter	Min.	Typ.	Max.	Units
Supply Voltage	5.5	24	30	V
Supply Current (Operating, 22C ambient) @ 5.5V @ 12V @ 24V		 50 30 20		 mA
Operating Temperature	-10	25	70	C
Storage Temperature	-40		125	C
Acceleration (single-axis version)			50000	G
Bandwidth			8	Hz

Note: A lower power variant of the **T7** is available on special order. Contact customer service for more information.

USD-CAN Version

Parameter	Max.	Units
Number of T7s in network	64	
Cable length to furthest T7 in network (excluding stubs)	700	feet
Individual stub length	16	feet
Total length of all stubs	250	feet

Note: The CAN version is designed to be used with the **CANA-232/CANA-485** CAN to serial port adapter

RS232 Versions

Parameter	Max.	Units
Number of T7s on bus	1	
Maximum total cable length	100	feet

Note: The T7 can drive 100 ft. of cable. Some PC's have limited drive on the RS232 bus which will limit the maximum cable length to less than 100 ft.

RS485 Versions

Parameter	Max.	Units
Number of T7s on bus	32	
Maximum total cable length	1000	feet

Notes:

1) Uses RS485 two wire network

2) Uses "fail-safe" drivers so bias resistors are not required

3) The RS485 network should be terminated with a 120-150 ohm resistor between BUS+ and BUS- at the source and at the last T7-1-485/T7-1-MOD4 on the network. US Digital terminating CAN cables (CA-CM-PS-CFTR) may be used at the last T7 on the bus to terminate it.

RS485 Power Supply Voltage

For a given network size, a minimum **T7-1-485/T7-1-MOD4** power supply voltage is needed to ensure that the last **T7** on the network is powered by at least 5.5V. The minimum power supply voltage can be calculated based on the number of networked **T7**s, the cable resistance/configuration and the current consumption of each **T7** as a function of voltage. The following tables show the recommended minimum power supply voltage as a function of cable length and number of **T7**s for several common network wiring schemes. The tables assume that US Digital CAN cables with a resistance of 3.3 ohms per hundred feet (#22 AWG) for the two power lines are used. USD CAN cables have a twisted pair for the data wires and can be used for both CAN and RS485 versions. The following data is for room temperature (22C) operation. Please contact customer service for other possible network configurations.

Recommended minimum power supply voltage for T7s equally spaced on a total cable length, L. Stub length from T-adapter t o a T7 is 6 feet.

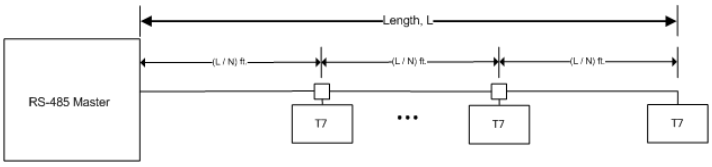

Number of T7's	Nominal supply current	Total cable length, L (T7's equally spaced)									
		100 ft	200 ft	300 ft	400 ft	500 ft	600 ft	700 ft	800 ft	900 ft	1000 ft
1	55 mA	9	9	9	9	9	9	9	9	9	9
2	110 mA	9	9	9	9	9	9	9	9	9	9
3	150 mA	9	9	9	9	9	9	9	9	12	12
4	200 mA	9	9	9	9	9	9	12	12	12	12
5	250 mA	9	9	9	9	9	12	12	12	12	12
10	480 mA	9	9	9	12	12	12	12	15	15	15
15	700 mA	9	9	12	12	15	15	15	18	18	18
20	1 A	9	12	12	15	15	15	18	18	24	24
25	1.2 A	9	12	12	15	18	18	24	24	24	24
32	1.5 A	9	12	15	18	18	24	24	24	26	26

Recommended minimum power supply voltage for T7s spaced 9 feet apart after an initial leader cable length, L. Stub length f rom T-adapter to a T7 is 6 feet.

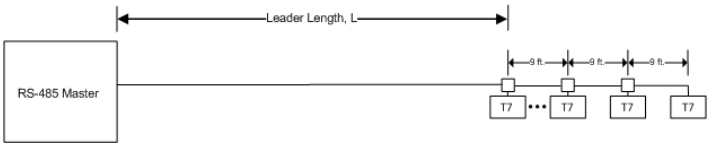

Number of T7's	Nominal supply current	Leader length, L (T7's spaced 9 ft. apart after leader)									
		100 ft	200 ft	300 ft	400 ft	500 ft	600 ft	700 ft	800 ft	900 ft	1000 ft
1	55 mA	9	9	9	9	9	9	9	9	9	9

2	110 mA	9	9	9	9	9	9	9	12	12	-
3	150 mA	9	9	9	9	9	12	12	12	12	-
4	200 mA	9	9	9	12	12	12	12	12	15	-
5	250 mA	9	9	12	12	12	12	15	15	15	-
10	480 mA	9	12	12	15	15	18	18	24	24	-
15	700 mA	12	15	15	18	24	24	24	26	-	-
20	900 mA	12	15	18	24	24	26	30	-	-	-
25	1.1 A	15	18	24	24	28	-	-	-	-	-
32	1.3 A	18	24	26	30	-	-	-	-	-	-

Accuracy and Noise

Parameter	Max.	Units	Test Conditions
Axis 2 Relative Angular Error	±0.1	Angular Degrees	0 ° C to 70 ° C, on-axis

- Up to ±5° off-axis operation is possible with 2? (95%) confidence on the maximum angular error

Damping Time, milliseconds	Standard Deviation (?) of Angle Noise, degrees	95% confidence interval (± 2?), degrees
10	.060	.121
20	.037	.074
50	.021	.042
100	.015	.029
200	.010	.021
500	.007	.014
1000	.005	.011
2000	.004	.008
5000	.003	.006

- Measurements taken at 25 ° C
- Damping time is a user programmable parameter

Mechanical

Parameter	Specification
Case Material	Glass filled polycarbonate
Weight	1.2 oz (34 g) nom.

Axis Orientation

Axis Orientation:

Noise Filtering

The **T7** uses a FIR (Finite Impulse Response) digital filter to provide electronic damping of the angle readings. The digital filter's impulse response has a triangular weighting that decays linearly to zero. The damping time is user programmable from 2 milliseconds to 5000 milliseconds. Since the sensor bandwidth is 8 Hz, damping times below 125 milliseconds do not provide any faster response. I ncreasing the damping time will average more samples together to form the reported angle. This will reduce noise in the output but increase the response time.

Interfacing with a host computer

An inclinometer network assembled with the USD-CAN, RS232 or RS485 version of the **T7** is shown below.

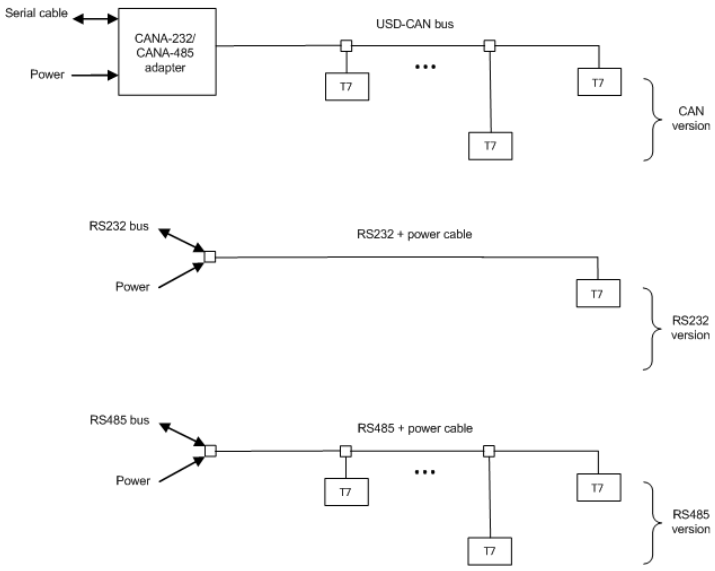

US Digital sells all the cables and connectors needed to wire a T7 network. The T7 uses the same connector for all interface versions.

Regardless of the interface option, a host PC, PLC or microcontroller communicates with a network of **T7**s by sending/receiving simple serial port commands over the RS232 or RS485 bus. In the case of the USD-CAN version, the CAN adapter serves as a command translator between a standard RS232/RS485 port and the USD-CAN bus used by the **T7**. The CAN adapter translates serial port command to the USD-CAN protocol and handles all network functions (access, error correction, etc.) to access the T7. Conversely, the CAN adapter also translates the reply from the T7 and sends the data to the host on the serial port. The CAN adapter frees the user from a complicated network interface on the host side. Note that the CAN adapter is not needed for the RS232/RS485 version of the T7. A host can communicate directly to these versions of the T7.

For more information on wiring the **T7-1-CAN**, see the **CANA-232/CANA-485 Datasheet**.

Network Address

T7-1-232, T7-1-485, or T7-1-CAN Addressing

Each **T7** on the network must be assigned a unique address from 1 to 100 or 127 (decimal). Address assignment is optional for the RS 232 version. All **T7**s are shipped with a default address of 127. Address 126 is a special broadcast address - all **T7**s will listen and respond to commands sent to this address. To assign an address to a **T7** unit, connect one **T7** to a PC's serial port - either directly if using the RS232 version or through the CAN adapter for the CAN version. The address can be set using the the included PC based "T7 D emo" software . Alternately, a host computer can send the "Set Address" serial port command to the T7. This procedure only needs to b e done once for each **T7** since the address is stored in non-volatile flash memory.

T7-1-MOD2, T7-1-MOD4 Addressing

Each **T7** on the network must be assigned a unique address from 1 to 247 (decimal). All **T7**
s are shipped with a default address of 127. Address 0 is the Modbus broadcast address. To assign an address to a **T7** unit, connect

one **T7**
to a PC's serial port (an adapter is needed for the RS485 version). The address can be set using the the included PC based "T7 Demo" software. Alternately, a host computer can send a special "Set Address" command to the T7. This procedure only needs to be done once for each **T7** since the address is stored in non-volatile flash memory.

J1 Pin-out

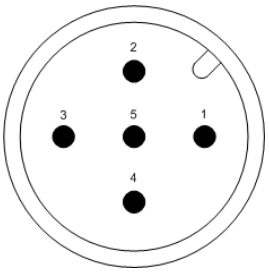

Pin	Description
1	Shield
2	Vin
3	GND
4	CANH / TXD / BUS+
5	CANL / RXD / BUS-

Default Configuration

All **T7**
units ship from US Digital with a default configuration. Configuration parameters are stored in non-volatile flash memory and can be easily changed by the user. The specifications are shown below. However, in larger quantities, special orders may be placed where the units can be preconfigured with any of the available settings noted in the **T7 Communication User Guide** or **T7 Modbus Communication User Guide**. Please contact customer service for special orders.

Default Configuration:

- Address = 127
- Single-axis version uses Axis 2
- Angle output range set to +/-180 (-179.99 to 179.99) deg.
- Counting Direction set to "forward"
- Angle Offset set to 0
- Damping time = 1000 milliseconds
- USD protocol versions use 115200 bps, 8 data bits, no parity, 1 stop bit
- Modbus protocol versions use 9600 bps, 8 data bits, even parity, 1 stop bit

T7 Networked Absolute Inclinometer

Ordering Information

T7 - [ ] - [ ]

Number of Calibrated Axis	Interface
1	CAN =*CAN*
	232 =*RS232*
	485 =*RS485*
	MOD2 =*RS232 Modbus*
	MOD4 =*RS485 Modbus*

Notes

- Cables and connectors are not included and must be ordered separately.
- For ordering information please see the Compatible Cables / Connectors section above.
- US Digital warrants its products against defects in materials and workmanship for two years. See complete warranty for details.

PEWATRON
a member of the Angst + Pfister Group

We are here for you. Addresses and Contacts

Sales Switzerland

Postcode 3000 – 9999
Liechtenstein

Matthias Rüegg
Ruhbergstrasse 32
CH-9230 Flawil

Phone + 41 44 877 35 18
Mobile + 41 76 491 66 66
Fax + 41 44 877 35 19

matthias.rueegg@pewatron.com

Postcode 1000 – 2999

Raffael Favaretto
Route d'Oron 124
CH-1673 Promasens

Phone + 41 44 877 35 22
Mobile + 41 76 444 63 14
Fax + 41 44 877 35 23

raffael.favaretto@pewatron.com

Sales Germany

Postcode 60000 – 79999

Dieter Hirthe
Mühlweg 23
D-71554 Weissach i.T.

Phone + 49 719 149 60 58
Mobile + 49 163 762 74 30
Fax + 49 719 193 31 88

dieter.hirthe@pewatron.com

Postcode 10000 – 59999
Postcode 80000 – 99999

Kurt Stritzelberger
Neumarkter Str. 86a
D-81673 Munich

Phone + 49 89 260 38 47
Mobile + 49 171 803 41 35
Fax + 49 89 43 10 91 91

kurt.stritzelberger@pewatron.com

Key Accounts
Aerospace and Defence

Claus Wübbena
Vogelkamp 26
D-26655 Westerstede

Phone + 49 4488 5204 614
Mobile + 49 173 9700 691
Fax + 49 4488 5204 616

claus.wuebbena@pewatron.com

Sales Austria

Kurt Stritzelberger
Neumarkter Str. 86a
D-81673 Munich

Phone + 49 89 260 38 47
Mobile + 49 17 18 03 41 35
Fax + 49 89 43 10 91 91

kurt.stritzelberger@pewatron.com

Sales Other Countries / Product Management

Sensors

Physical Sensors
Data Acquisition

Peter Felder
Phone + 41 44 877 35 05
peter.felder@pewatron.com

Geometrical Sensors

Eric Letsch
Phone + 41 44 877 35 14
eric.letsch@pewatron.com

Power Supplies

DC-DC Converters
Switching Power Supplies
DC-AC Inverters

Sebastiano Leggio
Phone + 41 44 877 35 06
sebastiano.leggio@pewatron.com

E-Components

Current Sensors
Man Machine Interface
Measurement Probes

Sebastiano Leggio
Phone + 41 44 877 35 06
sebastiano.leggio@pewatron.com

PEWATRON AG
Thurgauerstrasse 66
CH-8052 Zurich

Phone + 41 44 877 35 00
Fax + 41 44 877 35 25

www.pewatron.com
info@pewatron.com