PST Inclinometer152

Feature

4~20mA output
Fully sealed
IP67 protection
-40~85℃ operating temperature
Anti-electromagnetic interference
Anti-power interference
Dual-axis

PST152 series inclinometer is a high performance and hard angle measure device, mainly designed for engineering plant. Except satisfy the common application requirement, this type inclinometer adopt kinds of procedure to ensure the reliability and stability, as automotive level MCU, PCB with special protective treatment, tensile cables, automated testing before leave factory, high precision aluminium alloy housing and so on.

PST152 series inclinometer with 4~20mA output, can choose connector and pigtail.

PST152 series inclinometer can directly connect with vehicle battery or other no-regulated supply, because of its widen load impedance may be present in any PLC or data acquisition device.

Application field

Mine Machine、Food machine、Construction machinery、Farm machine、Factory automation、Transport machinery、Medical facilities

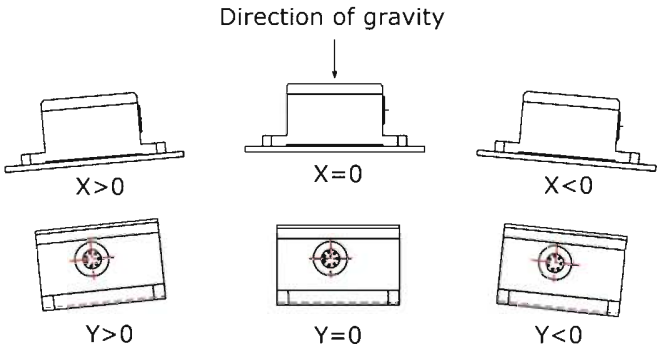

Specificarions (Ambient 25 C, unless specified)

Product Type	PPST152-5	PPST152-10	PPST152-15	PPST152-30	PPST152-45	PPST152-60
Range	±5°	±10°	±15°	±30°	±45°	±60°
Accuracy（max）	±0.1°	±0.1°	±0.1°	±0.1°	±0.15°	±0.2°
Resolution	0.01°	0.01°	0.01°	0.01°	0.02°	0.02°
Temp. Drift Coefficient	≤100ppm/ ℃	≤100ppm/ ℃	≤100ppm/ ℃	≤85 ppm/ ℃	≤85 ppm/ ℃	≤100 ppm/ ℃
Axis	Dual-axis					
Response Time	0.3s					
Cross-Axis Error	±0.3%FS					
Output Signal	4~20mA					
Output Impedance	150~250Ω					
Insulation Resistance	100M Ω					
EMC	CE Standard					
Power Supply	14~36VDC（no-regulated）					
Consumption Current	≤100mA					
Power Rejection Ratio	＞85dB					
Operating Temp.	-40~85℃					
Refresh Rate	5Hz(optional 10Hz, 20Hz)					
Protection Class	IP65/IP67					
Connection	Pigtail（optional Binder 712 connector）2meters cable					
Housing Material	Hard anodized aluminium alloy					
Cable	7 pins PVVC shielded cable					
Dimensions	81x54x35.25mm					
Shock	100g，11ms，3-axis (Standard: GB6587.4-86)					
Vibration	8g rms, 20~2000Hz (Standard:GB6587.5-86)					
Weight	240g(Except cable and connector)					
Optional:Temperature Compensation Accuracy @-10~65℃ @-40~85℃	±0.2°				±0.3°	±0.5°

Dimensions （mm）

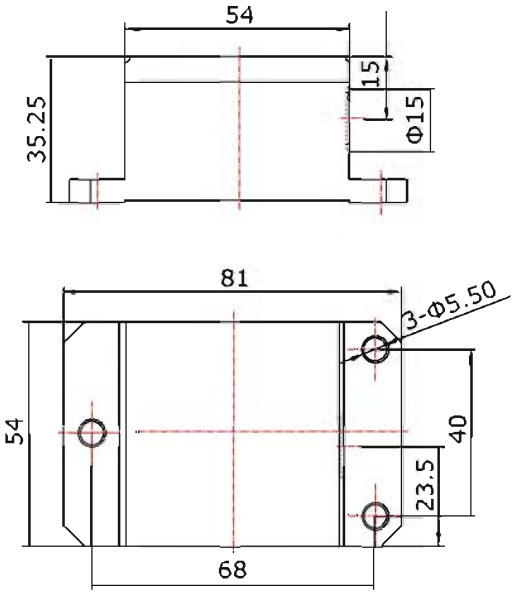

Binder 712 connector

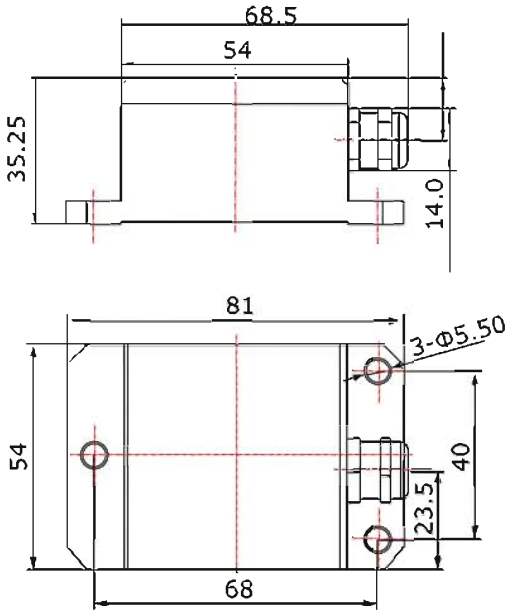

Pigtail connector

Wirings

Binder 712 connector

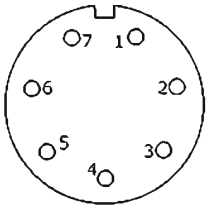

Pinning	
Pin	Function
1	Power+
2	Power/Signal GND
3	NC
4	Ioutx
5	Iouty
6	NC
7	NC

Pigtail connector

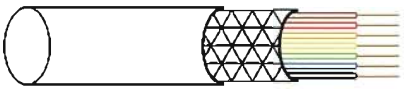

Pinning	
Color	Function
Red	Power+
Black	Power/Signal GND
Green	NC
Yellow	Ioutx
White	Iouty
Blue	NC
Brown	NC

Order

Model	Range	Accuracy@25 ℃	Lead wire	Axis
PST152-5	±5°	±0.1°	Metal pigtail connector Binder™ 712 connector	2
PST152-10	±10°	±0.1°	Metal pigtail connector Binder™ 712 connector	2
PST152-15	±15°	±0.1°	Metal pigtail connector Binder™ 712 connector	2
PST152-30	±30°	±0.1°	Metal pigtail connector Binder™ 712 connector	2
PST152-45	±45°	±0.15°	Metal pigtail connector Binder™ 712 connector	2
PST152-60	±60°	±0.15°	Metal pigtail connector Binder™ 712 connector	2

Ordering Code:

PST152-xx-P : Pigtail cable 2 m
-BC: Binder 712 connector

PEWATRON
a member of the Angst + Pfister Group

We are here for you. Addresses and Contacts

Sales Switzerland

Postcode 3000 – 9999
Liechtenstein

Matthias Rüegg
Ruhbergstrasse 32
CH-9230 Flawil

Phone + 41 44 877 35 18
Mobile + 41 76 491 66 66
Fax + 41 44 877 35 19

matthias.rueegg@pewatron.com

Postcode 1000 – 2999

Raffael Favaretto
Route d'Oron 124
CH-1673 Promasens

Phone + 41 44 877 35 22
Mobile + 41 76 444 63 14
Fax + 41 44 877 35 23

raffael.favaretto@pewatron.com

Sales Germany

Postcode 60000 – 79999

Dieter Hirthe
Mühlweg 23
D-71554 Weissach i.T.

Phone + 49 719 149 60 58
Mobile + 49 163 762 74 30
Fax + 49 719 193 31 88

dieter.hirthe@pewatron.com

Postcode 10000 – 59999
Postcode 80000 – 99999

Kurt Stritzelberger
Neumarkter Str. 86a
D-81673 Munich

Phone + 49 89 260 38 47
Mobile + 49 171 803 41 35
Fax + 49 89 43 10 91 91

kurt.stritzelberger@pewatron.com

Key Accounts
Aerospace and Defence

Claus Wübbena
Vogelkamp 26
D-26655 Westerstede

Phone + 49 4488 5204 614
Mobile + 49 173 9700 691
Fax + 49 4488 5204 616

claus.wuebbena@pewatron.com

Sales Austria

Kurt Stritzelberger
Neumarkter Str. 86a
D-81673 Munich

Phone + 49 89 260 38 47
Mobile + 49 17 18 03 41 35
Fax + 49 89 43 10 91 91

kurt.stritzelberger@pewatron.com

Sales Other Countries / Product Management

Sensors

Physical Sensors
Data Acquisition

Peter Felder
Phone + 41 44 877 35 05
peter.felder@pewatron.com

Geometrical Sensors

Eric Letsch
Phone + 41 44 877 35 14
eric.letsch@pewatron.com

Power Supplies

DC-DC Converters
Switching Power Supplies
DC-AC Inverters

Sebastiano Leggio
Phone + 41 44 877 35 06
sebastiano.leggio@pewatron.com

E-Components

Current Sensors
Man Machine Interface
Measurement Probes

Sebastiano Leggio
Phone + 41 44 877 35 06
sebastiano.leggio@pewatron.com

PEWATRON AG
Thurgauerstrasse 66
CH-8052 Zurich

Phone + 41 44 877 35 00
Fax + 41 44 877 35 25

www.pewatron.com
info@pewatron.com