PEI-Z215DL-I3 ±15° current output dual-axis inclinometer

General description

Inclinometer for harsh environments with a high damping

- 12VDC & 24VDC power supply
- Range +/-15°
- Standard current output 4…20mA
- Shielded cable
- Output frequency 5Hz
- IP68

Technical datas:

Item	Parameter	Unit	Remark
Measuring range	+15° ～ -15°	Degree	Two-axis
Resolution	0.01	Degree	
Accuracy	0.1	Degree	
Repeatability	< 0.1	Degree	

Environmental specifications

Item	Parameter	Unit	Remark
Voltage	10 to 30	VDC	
Operating current	<100	mA	
Operating temperature	-40 ～ +85	℃	
Storage temperature	-45 ～ 125	℃	
Temp. Drift	0.008	°/℃	
Size	90*90*60	Mm	

Connection definition and size:

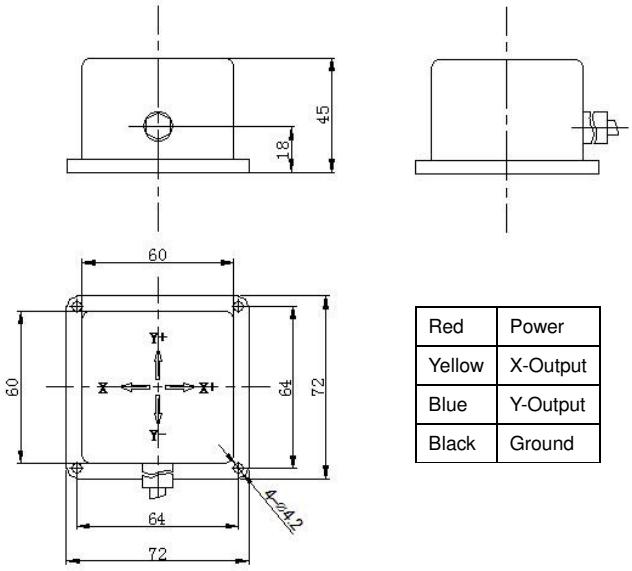

Red	Power
Yellow	X-Output
Blue	Y-Output
Black	Ground

Supporting your great ideas
www.pewatron.com
PEWATRON
a member of the Angst + Pfister Group

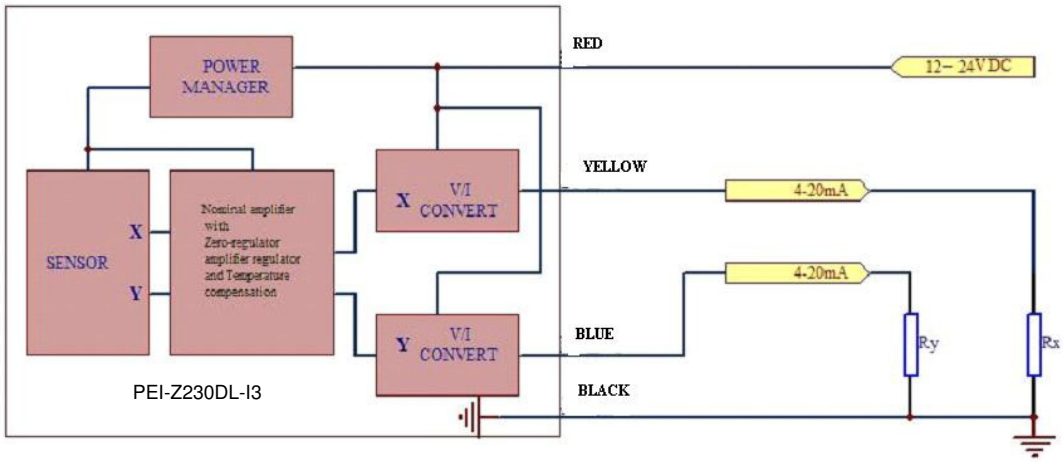

Tilt angle and output current (theory value) relevant relationship diagram:

Tilt angle	Output current	Tilt angle	Output current	Tilt angle	Output current
>+15°	4mA	+4.5°	9.6 mA	-7.5°	16 mA
+15°	4 mA	+3°	10.4 mA	-9°	16.8 mA
+13.5°	4.8 mA	+1.5°	11.2 mA	-10.5°	17.6 mA
+12°	5.6 mA	0°	12 mA	-12°	18.4 mA
+10.5°	6.4 mA	-1.5°	12.8 mA	-13.5°	19.2 mA
+9°	7.2 mA	-3°	13.6 mA	-15°	20 mA
+7.5°	8 mA	-4.5°	14.4 mA	<-15°	20 mA
+6°	8.8 mA	-6°	15.2 mA		

Specifications are subject to change without notice.

Supporting your great ideas
www.pewatron.com
PEWATRON
a member of the Angst + Pfister Group

PEWATRON
a member of the Angst + Pfister Group

We are here for you. Addresses and Contacts

Sales Switzerland

Postcode 3000 – 9999
Liechtenstein

Matthias Rüegg
Ruhbergstrasse 32
CH-9230 Flawil

Phone + 41 44 877 35 18
Mobile + 41 76 491 66 66
Fax + 41 44 877 35 19

matthias.rueegg@pewatron.com

Postcode 1000 – 2999

Raffael Favaretto
Route d'Oron 124
CH-1673 Promasens

Phone + 41 44 877 35 22
Mobile + 41 76 444 63 14
Fax + 41 44 877 35 23

raffael.favaretto@pewatron.com

Sales Germany

Postcode 60000 – 79999

Dieter Hirthe
Mühlweg 23
D-71554 Weissach i.T.

Phone + 49 719 149 60 58
Mobile + 49 163 762 74 30
Fax + 49 719 193 31 88

dieter.hirthe@pewatron.com

Postcode 10000 – 59999
Postcode 80000 – 99999

Kurt Stritzelberger
Neumarkter Str. 86a
D-81673 Munich

Phone + 49 89 260 38 47
Mobile + 49 171 803 41 35
Fax + 49 89 43 10 91 91

kurt.stritzelberger@pewatron.com

Key Accounts
Aerospace and Defence

Claus Wübbena
Vogelkamp 26
D-26655 Westerstede

Phone + 49 4488 5204 614
Mobile + 49 173 9700 691
Fax + 49 4488 5204 616

claus.wuebbena@pewatron.com

Sales Austria

Kurt Stritzelberger
Neumarkter Str. 86a
D-81673 Munich

Phone + 49 89 260 38 47
Mobile + 49 17 18 03 41 35
Fax + 49 89 43 10 91 91

kurt.stritzelberger@pewatron.com

Sales Other Countries / Product Management

Sensors

Physical Sensors
Data Acquisition

Peter Felder
Phone + 41 44 877 35 05
peter.felder@pewatron.com

Geometrical Sensors

Eric Letsch
Phone + 41 44 877 35 14
eric.letsch@pewatron.com

Power Supplies

DC-DC Converters
Switching Power Supplies
DC-AC Inverters

Sebastiano Leggio
Phone + 41 44 877 35 06
sebastiano.leggio@pewatron.com

E-Components

Current Sensors
Man Machine Interface
Measurement Probes

Sebastiano Leggio
Phone + 41 44 877 35 06
sebastiano.leggio@pewatron.com

PEWATRON AG
Thurgauerstrasse 66
CH-8052 Zurich

Phone + 41 44 877 35 00
Fax + 41 44 877 35 25

www.pewatron.com
info@pewatron.com