PEI-Z245DL-I3 Current type two-axis inclinometer

Current type dual axis inclinometer for harsh environment

- Power Supply 7 - 30VDC
- Response time 1 sec.
- +/-45° range
- Response frequency 5Hz
- High accuracy
- Standard current output 4..20mA
- Shielded cable
- IP67 Protection Level

Specifications:

Parameter	Value	Unit	Remark
Measuring range	±45°	degree	Two-axis
Response frequency	5	Hz	
Resolution	0.02	degree	
Non-linearity	±0.2%/FS	degree	@ 25±4℃
Sensitivity	0.178	mA/degree	
Zero output current	12	mA	
Temp. drift	0.008	°/℃	
Operating voltage	7～30	V	DC
Static operating current	<50	mA	Vcc=12V
Operating temperature	-40 ～ +85	℃	
Storage temperature	-45 ～ 125	℃	
Case size	72*72*45	mm	
Output wire length	2	m	

Dimensions & Cable Connection

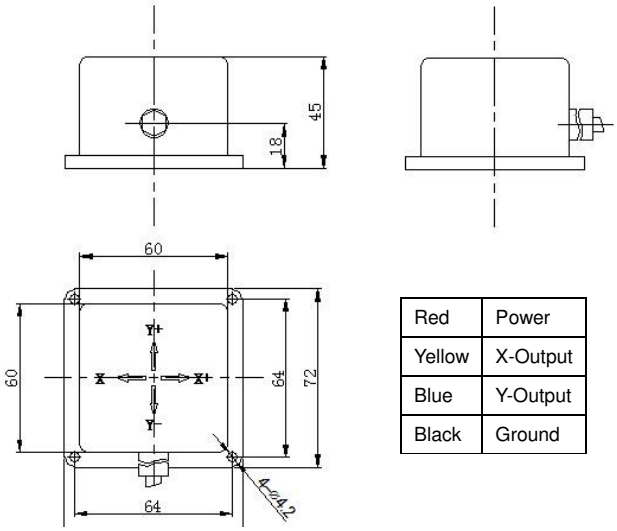

Red	Power
Yellow	X-Output
Blue	Y-Output
Black	Ground

Supporting your great ideas www.pewatron.com PEWATRON a member of the Angst + Pfister Group

Output Signal

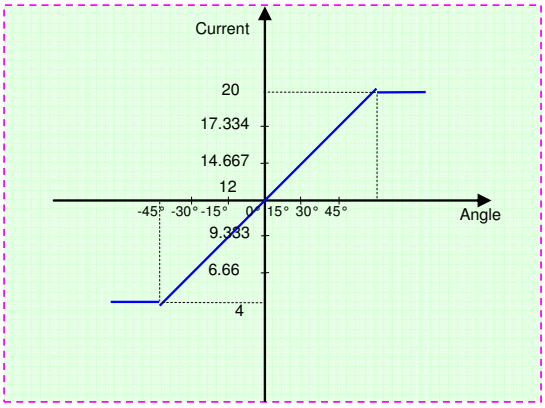

Block Diagram

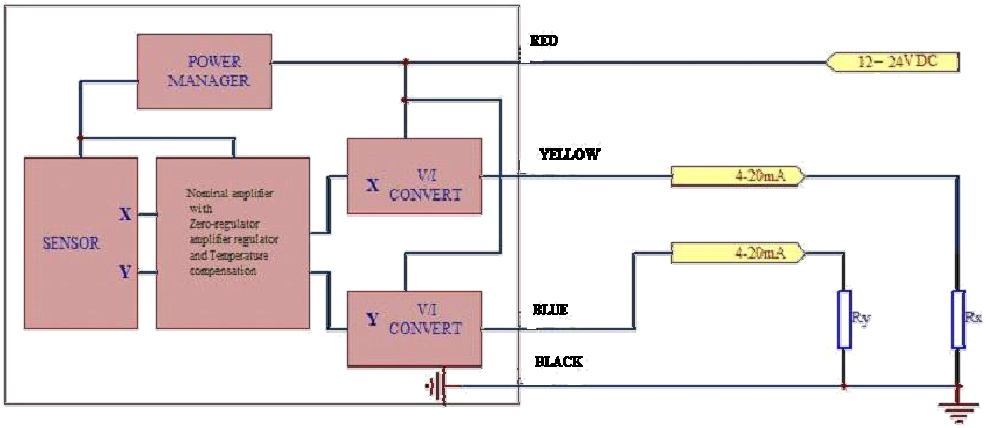

Notes:

1) Min. load resistance: :

Load resistance ≤（supply voltage－6V－voltage drop of output wire）/max output current

For example：supply voltage 12V，output wire 100m，2*0.14mm^2，max output current 20mA；

Power supply 12V → Load resistance ≤（12－6－0.6）/0.02 = 270Ω

2) Angle and current conversion formula: angle= (output angle-12mA)/0.178

Specifications are subject to change without notice.

Supporting your great ideas www.pewatron.com PEWATRON a member of the Angst + Pfister Group

PEWATRON
a member of the Angst + Pfister Group

We are here for you. Addresses and Contacts

Sales Switzerland

Postcode 3000 – 9999
Liechtenstein

Matthias Rüegg
Ruhbergstrasse 32
CH-9230 Flawil

Phone + 41 44 877 35 18
Mobile + 41 76 491 66 66
Fax + 41 44 877 35 19

matthias.rueegg@pewatron.com

Postcode 1000 – 2999

Raffael Favaretto
Route d'Oron 124
CH-1673 Promasens

Phone + 41 44 877 35 22
Mobile + 41 76 444 63 14
Fax + 41 44 877 35 23

raffael.favaretto@pewatron.com

Sales Germany

Postcode 60000 – 79999

Dieter Hirthe
Mühlweg 23
D-71554 Weissach i.T.

Phone + 49 719 149 60 58
Mobile + 49 163 762 74 30
Fax + 49 719 193 31 88

dieter.hirthe@pewatron.com

Postcode 10000 – 59999
Postcode 80000 – 99999

Kurt Stritzelberger
Neumarkter Str. 86a
D-81673 Munich

Phone + 49 89 260 38 47
Mobile + 49 171 803 41 35
Fax + 49 89 43 10 91 91

kurt.stritzelberger@pewatron.com

Key Accounts
Aerospace and Defence

Claus Wübbena
Vogelkamp 26
D-26655 Westerstede

Phone + 49 4488 5204 614
Mobile + 49 173 9700 691
Fax + 49 4488 5204 616

claus.wuebbena@pewatron.com

Sales Austria

Kurt Stritzelberger
Neumarkter Str. 86a
D-81673 Munich

Phone + 49 89 260 38 47
Mobile + 49 17 18 03 41 35
Fax + 49 89 43 10 91 91

kurt.stritzelberger@pewatron.com

Sales Other Countries / Product Management

Sensors

Physical Sensors
Data Acquisition

Peter Felder
Phone + 41 44 877 35 05
peter.felder@pewatron.com

Geometrical Sensors

Eric Letsch
Phone + 41 44 877 35 14
eric.letsch@pewatron.com

Power Supplies

DC-DC Converters
Switching Power Supplies
DC-AC Inverters

Sebastiano Leggio
Phone + 41 44 877 35 06
sebastiano.leggio@pewatron.com

E-Components

Current Sensors
Man Machine Interface
Measurement Probes

Sebastiano Leggio
Phone + 41 44 877 35 06
sebastiano.leggio@pewatron.com

PEWATRON AG
Thurgauerstrasse 66
CH-8052 Zurich

Phone + 41 44 877 35 00
Fax + 41 44 877 35 25

www.pewatron.com
info@pewatron.com