PEI-Z230-CL-232-3 two-axis inclinometer

PEI-Z230-CL-232-3 is a dual axis inclinometer with RS232 output, intended for use in harsh environments where digital data transmission is needed, like in monitoring systems.

- High accuracy and resolution
- Digital filtering
- Shock resistant
- Zero setting
- IP67

Specifications:

Parameter	Value	Unit	Remark
Measuring range	±30	degree	Two-axis
Resolution	0.005	degree	
Accuracy[1)]	0.05	degree	@25° C
Zero temperature drift	±0.01	Degree / ℃	25℃ reference, -40－+85℃
Response time	1	Second	
Operating voltage	8 … 30	V（dc）	24VDC recommended
Operating current	<60	mA	@ 24VDC
Operating temperature	－40-+85	℃	
Storage temperature	-45-+125	℃	

$$\text{Accuracy} = \sqrt{\frac{X_1^2 + X_2^2 + X_3^2 + \ldots + X_n^2}{n}}$$

n — number of measurements, n ≥ 16

$X_1、X_2、X_3 \cdots X_n$ — sum of n measured errors

Mechanical dimensions (horizontal position)

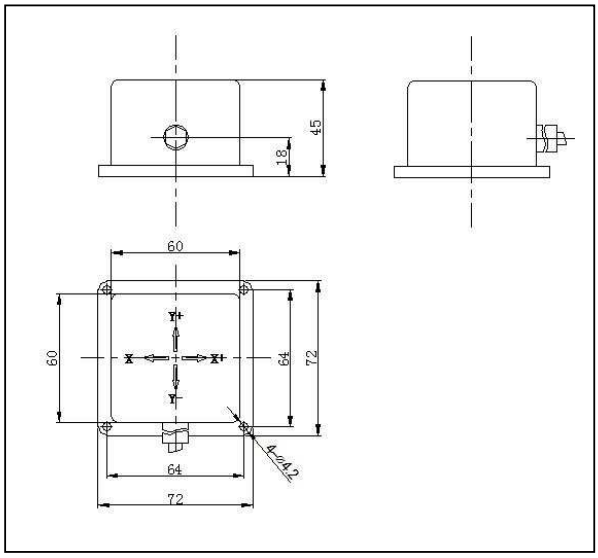

Connections

Red	Vcc
Black	Gnd
Blue	RXD
Green / Yellow	TXD

Option: PEI-Z230-CL-485-3
with RS485 Bus-Interface

Supporting your great ideas www.pewatron.com PEWATRON a member of the Angst + Pfister Group

Installation:

The inclinometer is factory calibrated.
It is important that the inclinometer measuring plane is parallel to the mounting plane.
The outputs shall equal the zero value when the sensor is in zero position.
The “Clearing” command allows zero setting

Angle output Data

1 RS232 serial interface communication protocol settings

Baud rate: 9600bps (default) Start bit: 1 bit Data bit: 8 bit Stop bit: 1 bit

2 Angle output format (ASC11 Format)

One set of data has 20 bytes.

Byte1：X

Byte2：＋/-

Byte3：X-axis tens digit of angle value.

Byte4：X-axis units digit of angle value.

Byte5：point“.”

Byte6：one digit after the decimal point of X-axis angle value.

Byte7：two digit after the decimal point of X-axis angle value.

Byte8：three digit after the decimal point of X-axis angle value.

Byte9：0x20

Byte10：0x20

Byte11：Y

Byte12：＋/-

Byte13：Y-axis tens digit of angle value

Byte14：Y-axis units digit of angle value

Byte15：point“.”

Byte16：one digit after the decimal point of Y-axis angle value.

Byte17：two digit after the decimal point of Y-axis angle value.

Byte18：three digit after the decimal point of Y-axis angle value.

Byte19：0x0d

Byte20：0x0a

ITEM	SIGNED	DATA	SPACE	ITEM	SIGNED	DATA	STOP
X	+/-	**.***	space	Y	+/-	**.***	enter/new line

Eg. current angle is +23.675 degrees on X-axis，-01.026 degrees on Y-axis，

Will be displayed as: X＋23.675 Y－01.026

Note: display of value 99.999 means overrange.

User Instructions

“*^9600”	Sets baudrate at 9600bps, outputs “Baudrate:9600" after command is accepted
“*^1920”	Sets baudrate at 19200bps, outputs “Baudrate:19200" after command is accepted
“*^4800”	Sets baudrate at 4800bps, outputs “Baudrate:4800" after command is accepted
“&S”	Zero setting of current position, value is stored in the EEPROM, outputs “set current zero over” after command is accepted
“*RESET	Factory settings will be restored after power-on., outputs “V” after command is accepted
“&R”	Clear the zero setting, outputs “clear zero setted” after command is accepted.
"$"	Stops sending and receiving angle information, enters command mode
"*@"	Starts angle output mode, exits angle mode

Note 1: After Power-on, the Sensor will output the software version and enter automatically into output angle mode.

Note 2: If the user had set the zero point previously, then the system will output “relative angle measure” after Power-on.

Note 3: all modified settings through commands are stored in the EEPROM

Note 4: The commands have to be written in capital letters.

These Specifications are subject to change without notice!

Supporting your great ideas www.pewatron.com PEWATRON a member of the Angst + Pfister Group

PEWATRON
a member of the Angst + Pfister Group

We are here for you. Addresses and Contacts

Sales Switzerland

Postcode 3000 – 9999
Liechtenstein

Matthias Rüegg
Ruhbergstrasse 32
CH-9230 Flawil

Phone + 41 44 877 35 18
Mobile + 41 76 491 66 66
Fax + 41 44 877 35 19

matthias.rueegg@pewatron.com

Postcode 1000 – 2999

Raffael Favaretto
Route d'Oron 124
CH-1673 Promasens

Phone + 41 44 877 35 22
Mobile + 41 76 444 63 14
Fax + 41 44 877 35 23

raffael.favaretto@pewatron.com

Sales Germany

Postcode 60000 – 79999

Dieter Hirthe
Mühlweg 23
D-71554 Weissach i.T.

Phone + 49 719 149 60 58
Mobile + 49 163 762 74 30
Fax + 49 719 193 31 88

dieter.hirthe@pewatron.com

Postcode 10000 – 59999
Postcode 80000 – 99999

Kurt Stritzelberger
Neumarkter Str. 86a
D-81673 Munich

Phone + 49 89 260 38 47
Mobile + 49 171 803 41 35
Fax + 49 89 43 10 91 91

kurt.stritzelberger@pewatron.com

Key Accounts
Aerospace and Defence

Claus Wübbena
Vogelkamp 26
D-26655 Westerstede

Phone + 49 4488 5204 614
Mobile + 49 173 9700 691
Fax + 49 4488 5204 616

claus.wuebbena@pewatron.com

Sales Austria

Kurt Stritzelberger
Neumarkter Str. 86a
D-81673 Munich

Phone + 49 89 260 38 47
Mobile + 49 17 18 03 41 35
Fax + 49 89 43 10 91 91

kurt.stritzelberger@pewatron.com

Sales Other Countries / Product Management

Sensors

Physical Sensors
Data Acquisition

Peter Felder
Phone + 41 44 877 35 05
peter.felder@pewatron.com

Geometrical Sensors

Eric Letsch
Phone + 41 44 877 35 14
eric.letsch@pewatron.com

Power Supplies

DC-DC Converters
Switching Power Supplies
DC-AC Inverters

Sebastiano Leggio
Phone + 41 44 877 35 06
sebastiano.leggio@pewatron.com

E-Components

Current Sensors
Man Machine Interface
Measurement Probes

Sebastiano Leggio
Phone + 41 44 877 35 06
sebastiano.leggio@pewatron.com

PEWATRON AG
Thurgauerstrasse 66
CH-8052 Zurich

Phone + 41 44 877 35 00
Fax + 41 44 877 35 25

www.pewatron.com
info@pewatron.com