PEI-Z181J-SV3 one axis tilt sensor for boom angle measurement

General description:

- one axis -20 to 80°
- analog output 0..5V
- 2 alarm signals:Angle ≤ 15º and ≥71º.
- Zero setting with Switch
- IP67
- Intended for boom angle measurement or torque limiter, in cranes, leveling arms, medical equipment, oil drilling equipment

Specifications

		Test condition	Min value	Typical value	Max value	Unit
Performance parameter	Total range	One axis	-25		+81	°
	Linear range		-20		+80	°
	Resolution			0. 1		°
	Non-linearity①	VCC=24V		±0.4		%/FS
	Sensitivity ②		47.0	47.2	47.4	mV/°
	Repeatability			0.2	0.3	°
Electrical parameter	Supply voltage③		8		30	V（DC）
	Quiescent current④	VCC=24V		16	20	mA
	Zero output voltage		1.174	1.179	1.184	mV
	Operating temperature		-40		+85	℃
Others	Zero temperature drift	-40---+85℃		0.009		°/℃
	Size			72*72*45		mm
	Cable length		0.95	1	1.05	M

①：Non-linearity means the deviation degree of output voltage line and best fitting curve in the measuring range between -20º and 80º.

②：Sensitivity definits as follow：Vsens ={Vout(@80°)-Vout(@-20°)}/{100°}[mV/°]

③：24VDC is recommended .

④：Quiescent current is 16mA @ 24VDC when product is with alarm switch open

Input-Output characteristic：

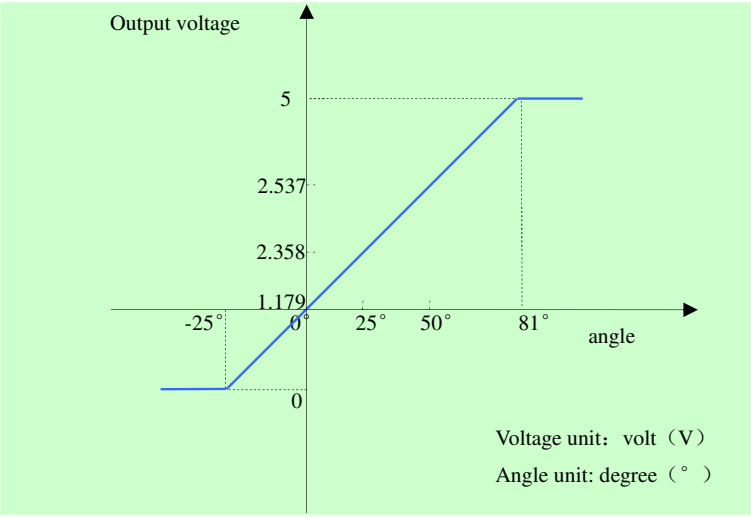

User instruction:

1. To be installed vertically, with cable output down. Then output angle value is 0º, corresponding voltage value is 1.179V（±0.005）（output voltage increases while turning CW, and output decreases while turning in CCW direction.）
2. angle calculation:
   a. total angle：-25°～ 81°, corresponding voltage 0V ～ 5V
   b. angle＝（output voltage－zero output voltage）/sensitivity
3. set and reset relative zero.
   a. set relative zero ：shorting zero line to GND for about 1 second will set the current angle as zero（memorised after power off ）
   b. reset relative zero：shorting the reset line to GND for about 1 second will delete the relative zero and renew the absolute output.
4. alarm signals
   a. this product has two alarm signals, to be connected to VCC via external loads.(max. load current 500mA)
   b. The switch is Normally Open
   c. yellow line output alarm signal if angle value ≤15°
   d. green line output alarm signal if angle value ≥71°

Supporting your great ideas www.pewatron.com PEWATRON a member of the Angst + Pfister Group

Wire connection definition and installation size:

Red	Black	Green	Yellow	Blue	Brown	white
VCC （supply）	GND （ground）	Voltage output	≤15°alarm signal	≥71°alarm signal	Set zero	reset

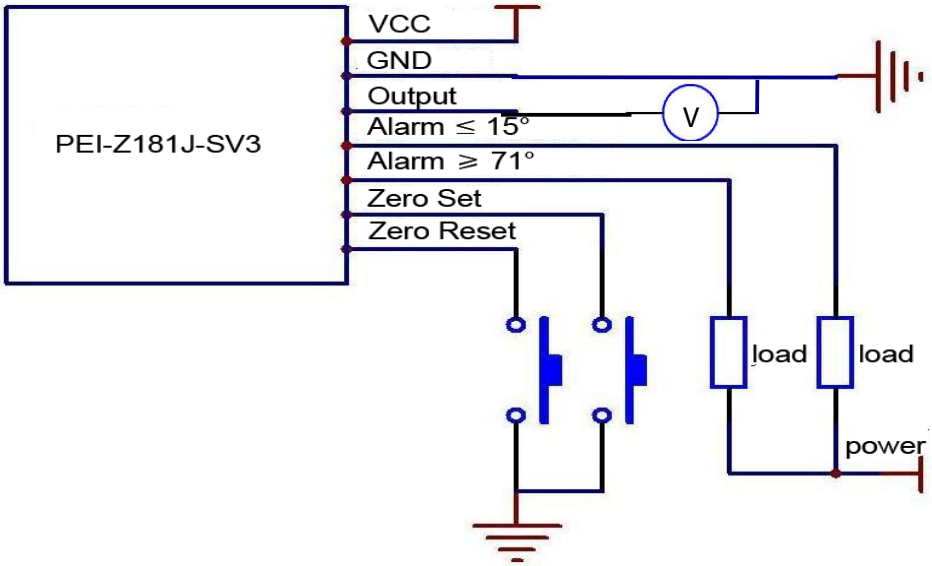

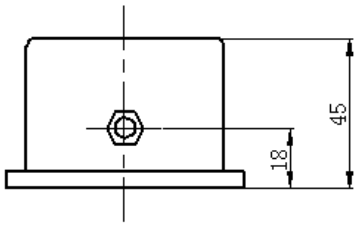

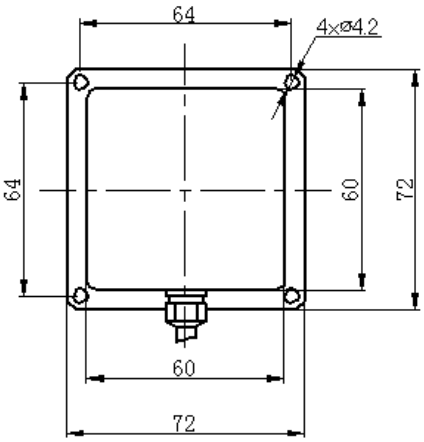

Order information： PEI-Z181J-SV3

Standard: Alarm switch NO (normally open)

Option: Alarm switch NC (normally closed)

Specifications are subject to change without notice!

PEWATRON
a member of the Angst + Pfister Group

We are here for you. Addresses and Contacts

Sales Switzerland

Postcode 3000 – 9999
Liechtenstein

Matthias Rüegg
Ruhbergstrasse 32
CH-9230 Flawil

Phone + 41 44 877 35 18
Mobile + 41 76 491 66 66
Fax + 41 44 877 35 19

matthias.rueegg@pewatron.com

Postcode 1000 – 2999

Raffael Favaretto
Route d'Oron 124
CH-1673 Promasens

Phone + 41 44 877 35 22
Mobile + 41 76 444 63 14
Fax + 41 44 877 35 23

raffael.favaretto@pewatron.com

Sales Germany

Postcode 60000 – 79999

Dieter Hirthe
Mühlweg 23
D-71554 Weissach i.T.

Phone + 49 719 149 60 58
Mobile + 49 163 762 74 30
Fax + 49 719 193 31 88

dieter.hirthe@pewatron.com

Postcode 10000 – 59999
Postcode 80000 – 99999

Kurt Stritzelberger
Neumarkter Str. 86a
D-81673 Munich

Phone + 49 89 260 38 47
Mobile + 49 171 803 41 35
Fax + 49 89 43 10 91 91

kurt.stritzelberger@pewatron.com

Key Accounts
Aerospace and Defence

Claus Wübbena
Vogelkamp 26
D-26655 Westerstede

Phone + 49 4488 5204 614
Mobile + 49 173 9700 691
Fax + 49 4488 5204 616

claus.wuebbena@pewatron.com

Sales Austria

Kurt Stritzelberger
Neumarkter Str. 86a
D-81673 Munich

Phone + 49 89 260 38 47
Mobile + 49 17 18 03 41 35
Fax + 49 89 43 10 91 91

kurt.stritzelberger@pewatron.com

Sales Other Countries / Product Management

Sensors

Physical Sensors
Data Acquisition

Peter Felder
Phone + 41 44 877 35 05
peter.felder@pewatron.com

Geometrical Sensors

Eric Letsch
Phone + 41 44 877 35 14
eric.letsch@pewatron.com

Power Supplies

DC-DC Converters
Switching Power Supplies
DC-AC Inverters

Sebastiano Leggio
Phone + 41 44 877 35 06
sebastiano.leggio@pewatron.com

E-Components

Current Sensors
Man Machine Interface
Measurement Probes

Sebastiano Leggio
Phone + 41 44 877 35 06
sebastiano.leggio@pewatron.com

PEWATRON AG
Thurgauerstrasse 66
CH-8052 Zurich

Phone + 41 44 877 35 00
Fax + 41 44 877 35 25

www.pewatron.com
info@pewatron.com