FORM AE043 ISS1

PRODUCT DATA SHEET

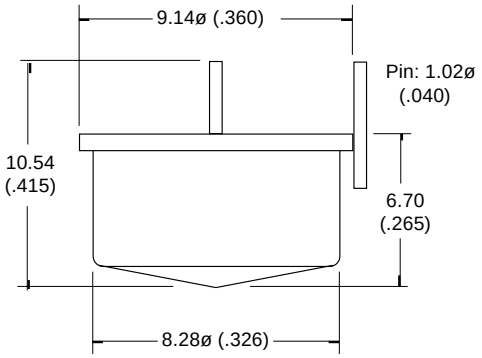

Drawings not to scale
All dimensions in mm (inches) nominal

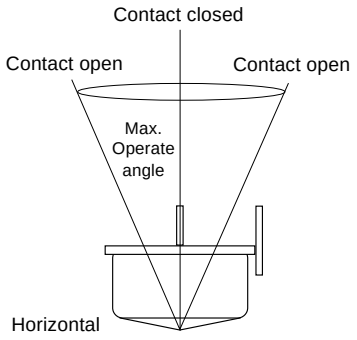

Tip-Over Switches operate when the switch is tilted from the vertical position. The angle through which the switch has to move before operating is called the operating angle. These switches are omni-directional.

SPECIFICATION

CONTACT FORM/STYLE		Normally Closed
SWITCHING VOLTAGE	Max. Vac	120
SWITCHING CURRENT	Max. A	1.0A
SWITCHING CAPACITY	Max. VA	100
CONTACT RESISTANCE	Max. Ω	2
OPERATING ANGLE	Max. Deg˚	15° ± 4°
OPERATING TEMPERATURE	Deg. ˚C	-37˚ + 100˚
STORAGE TEMPERATURE	Deg. ˚C	-40˚ + 125˚
CASE MATERIAL		Steel-tin plated
CABLE/TERMINATION		Pin
FEATURES		-

NOTE: When cutting or bending switch leads it is important that the glass seal is not damaged. The cutting or bending point should be no closer than 3mm (.118) to the glass to metal seal and the lead should be supported between the cutting or bending point and the glass to metal seal.

TIP-OVER SWITCH - Metal - Mercury Contacts

PART NUMBER
CM 1415-1

Rev. No.	Revision Note	Date	Signature
B	Web Site 2001	1-3-01	RG

As part of the company policy of continued product improvement, specifications may change without notice. Our sales office will be pleased to help you with the latest information on this product range and details of our full design and manufacturing service. All products are supplied to our standard conditions of sale otherwise agreed in writing.

©2001

PEWATRON
a member of the Angst + Pfister Group

We are here for you. Addresses and Contacts

Sales Switzerland

Postcode 3000 – 9999
Liechtenstein

Matthias Rüegg
Ruhbergstrasse 32
CH-9230 Flawil

Phone + 41 44 877 35 18
Mobile + 41 76 491 66 66
Fax + 41 44 877 35 19

matthias.rueegg@pewatron.com

Postcode 1000 – 2999

Raffael Favaretto
Route d'Oron 124
CH-1673 Promasens

Phone + 41 44 877 35 22
Mobile + 41 76 444 63 14
Fax + 41 44 877 35 23

raffael.favaretto@pewatron.com

Sales Germany

Postcode 60000 – 79999

Dieter Hirthe
Mühlweg 23
D-71554 Weissach i.T.

Phone + 49 719 149 60 58
Mobile + 49 163 762 74 30
Fax + 49 719 193 31 88

dieter.hirthe@pewatron.com

Postcode 10000 – 59999
Postcode 80000 – 99999

Kurt Stritzelberger
Neumarkter Str. 86a
D-81673 Munich

Phone + 49 89 260 38 47
Mobile + 49 171 803 41 35
Fax + 49 89 43 10 91 91

kurt.stritzelberger@pewatron.com

Key Accounts
Aerospace and Defence

Claus Wübbena
Vogelkamp 26
D-26655 Westerstede

Phone + 49 4488 5204 614
Mobile + 49 173 9700 691
Fax + 49 4488 5204 616

claus.wuebbena@pewatron.com

Sales Austria

Kurt Stritzelberger
Neumarkter Str. 86a
D-81673 Munich

Phone + 49 89 260 38 47
Mobile + 49 17 18 03 41 35
Fax + 49 89 43 10 91 91

kurt.stritzelberger@pewatron.com

Sales Other Countries / Product Management

Sensors

Physical Sensors
Data Acquisition

Peter Felder
Phone + 41 44 877 35 05
peter.felder@pewatron.com

Geometrical Sensors

Eric Letsch
Phone + 41 44 877 35 14
eric.letsch@pewatron.com

Power Supplies

DC-DC Converters
Switching Power Supplies
DC-AC Inverters

Sebastiano Leggio
Phone + 41 44 877 35 06
sebastiano.leggio@pewatron.com

E-Components

Current Sensors
Man Machine Interface
Measurement Probes

Sebastiano Leggio
Phone + 41 44 877 35 06
sebastiano.leggio@pewatron.com

PEWATRON AG
Thurgauerstrasse 66
CH-8052 Zurich

Phone + 41 44 877 35 00
Fax + 41 44 877 35 25

www.pewatron.com
info@pewatron.com