PEI-Z181J-SV3 one axis tilt sensor for boom angle measurement

General description:

- one axis -20 to 80°
- analog output 0..5V
- 2 alarm signals:Angle ≤ 15º and ≥71º.
- Zero setting with Switch
- IP67
- Intended for boom angle measurement or torque limiter, in cranes, leveling arms, medical equipment, oil drilling equipment

Specifications

		Test condition	Min value	Typical value	Max value	Unit
Performance parameter	Total range	One axis	-25		+81	°
	Linear range		-20		+80	°
	Resolution			0. 1		°
	Non-linearity①	VCC=24V		±0.4		%/FS
	Sensitivity ②		47.0	47.2	47.4	mV/°
	Repeatability			0.2	0.3	°
Electrical parameter	Supply voltage③		8		30	V（DC）
	Quiescent current④	VCC=24V		16	20	mA
	Zero output voltage		1.174	1.179	1.184	mV
	Operating temperature		-40		+85	℃
Others	Zero temperature drift	-40---+85℃		0.009		°/℃
	Size			72*72*45		mm
	Cable length		0.95	1	1.05	M

①：Non-linearity means the deviation degree of output voltage line and best fitting curve in the measuring range between -20º and 80º.

②：Sensitivity definits as follow：Vsens ={Vout(@80°)-Vout(@-20°)}/{100°}[mV/°]

③：24VDC is recommended .

④：Quiescent current is 16mA @ 24VDC when product is with alarm switch open

Input-Output characteristic：

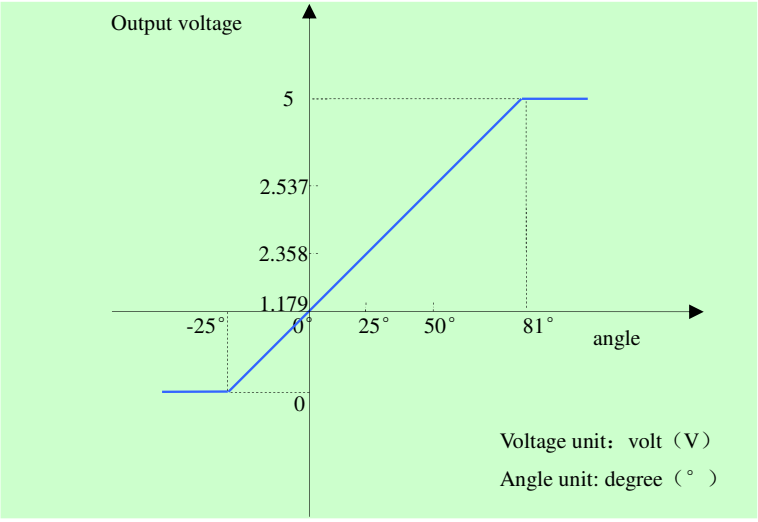

User instruction:

1. To be installed vertically, with cable output down. Then output angle value is 0º, corresponding voltage value is 1.179V（±0.005）（output voltage increases while turning CW, and output decreases while turning in CCW direction.）
2. angle calculation:
   a. total angle：-25°～ 81°, corresponding voltage 0V ～ 5V
   b. angle＝（output voltage－zero output voltage）/sensitivity
3. set and reset relative zero.
   a. set relative zero ：shorting zero line to GND for about 1 second will set the current angle as zero（memorised after power off ）
   b. reset relative zero：shorting the reset line to GND for about 1 second will delete the relative zero and renew the absolute output.
4. alarm signals
   a. this product has two alarm signals, to be connected to VCC via external loads.(max. load current 500mA)
   b. The switch is Normally Open
   c. yellow line output alarm signal if angle value ≤15°
   d. green line output alarm signal if angle value ≥71°

Wire connection definition and installation size:

Red	Black	Green	Yellow	Blue	Brown	white
VCC (supply)	GND (ground)	Voltage output	≤15°alarm signal	≥71°alarm signal	Set zero	reset

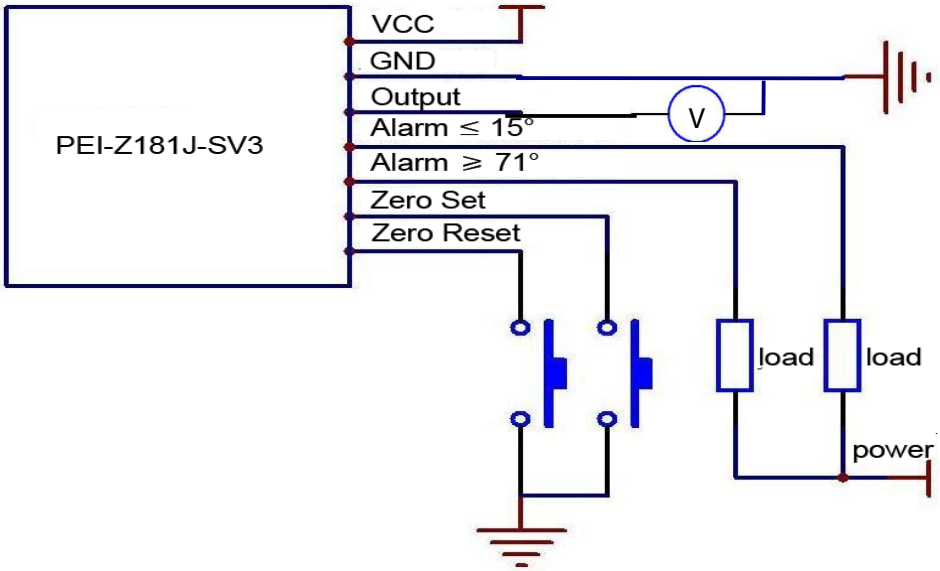

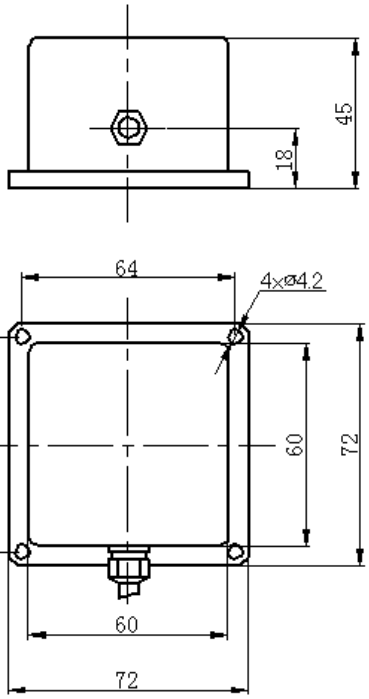

Order information: PEI-Z181J-SV3

Standard: Alarm switch NO (normally open)

Option: Alarm switch NC (normally closed)

Specifications are subject to change without notice!

Angst+Pfister
Sensors and Power

We are here for you. Addresses and Contacts.

Headquarter Switzerland:

Angst+Pfister Sensors and Power AG
Thurgauerstrasse 66
CH-8050 Zurich
Phone +41 44 877 35 00
sensorsandpower@angst-pfister.com

Office Germany:

Angst+Pfister Sensors and Power Deutschland GmbH
Edisonstraße 16
D-85716 Unterschleißheim
Phone +49 89 374 288 87 00
sensorsandpower.de@angst-pfister.com

Scan here and get an overview of personal contacts!

sensorsandpower.angst-pfister.com