THIS PRODUCT COMPLIES WITH RoHS DIRECTIVE.

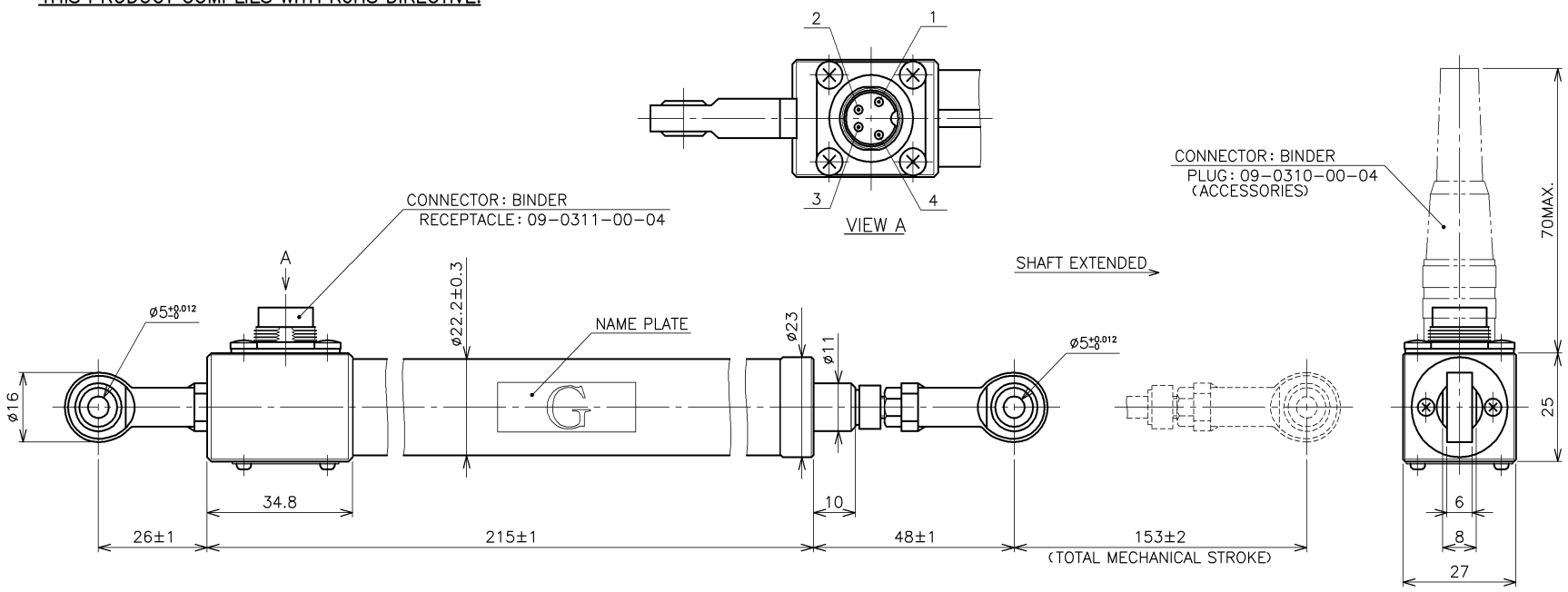

SPECIFICATIONS

ELECTRICAL STROKE	:	150±1mm
TOTAL RESISTANCE	:	1・2・5・10kΩ ±20%
INDEPENDENT LINEARITY	:	±0.3% (AVAILABLE: ±0.1%)
POWER RATING	:	3W/70℃
OUTPUT SMOOTHNESS	:	0.1% MAX.
INSULATION RESISTANCE	:	100MΩ MIN. DC500V
DIELECTRIC STRENGTH	:	AC500V 1MINUTE
TEMPERATURE COEFFICIENT OF RESISTANCE	:	±400ppm/K
TOTAL MECHANICAL STROKE	:	153±2mm
FRICTION	:	2N MAX.

SCHEMATIC

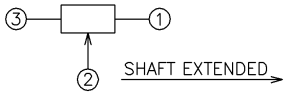

④ (OPEN)

・1, 2, 3, 4: CONNECTOR PIN No.

NAME PLATE

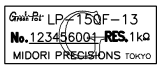

REV	DATE	DESCRIPTION	DRAWN	CHKD
1				

DRAWING FOR APPROVAL				SPEC. NO.
MODEL: LP-150F-13				
APPROVED	TOLERANCE	DATE 1.27.'10		MIDORI PRECISIONS CO., LTD.
CHECKED M. Kamiki	≤10 ±0.25 / 10< ≤100 ±0.5	SCALE 1 : 1		DRAWING NO.
DRAWN K.Yoshino	100< ±1.0 / ANGLE ±1.5°	DRAWING PRACTICE		B-MPE-B95

Angst+Pfister
Sensors and Power

We are here for you. Addresses and Contacts.

Headquarter Switzerland:

Angst+Pfister Sensors and Power AG

Thurgauerstrasse 66
CH-8050 Zurich

Phone +41 44 877 35 00
sensorsandpower@angst-pfister.com

Office Germany:

Angst+Pfister Sensors and Power Deutschland GmbH

Edisonstraße 16
D-85716 Unterschleißheim

Phone +49 89 374 288 87 00
sensorsandpower.de@angst-pfister.com

Scan here and get an overview of personal contacts!

sensorsandpower.angst-pfister.com