Easy Gas Sensor
ES4-H_2S-100 - Hydrogen Sulfide

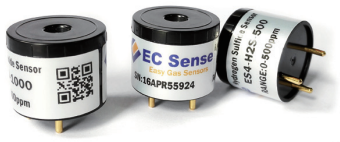

EC Sense
Easy Gas Sensors

Features

- Extreme linear response up to high concentration
- Low noise
- Short warm up time
- No electrolyte leakage
- Low cost at large volumes
- Fast response
- Individually calibrated including test report

Typical applications

- Water treatment plants
- Biogas applications
- Portable & fixed point applications
- Leakage detection

Technical Specification

Performance

Sensitivity	90 ± 20 nA / ppm
Zero current	± 20 nA
Response time	
$-T_{50}$	< 10 s
$-T_{90}$	< 30 s
Range	100 ppm
Repeatability	1 %
Lower Detectable Limit (LDL)	≤ 1 ppm
Resolution (16Bit ADC)	0.1 ppm
Maximum overload	200 ppm
Linear range	200 ppm

Environment

Temperature Range	-40 to 50 °C
Humidity Range (non condensing)	10 to 95 % r.H
Pressure Range	800 to 1200 hPa

Operation

Operating principle	amperometric
Bias voltage	0 mV
Recommended load resistor	100 Ω
Warm up time	< 20 s

Lifetime

Long Term Sensitivity Drift	< 1 %/month
Zero Drift in clean air	< 2 ppm
Storage conditions	0-20 °C
Storage life	6 month
Expected Life Time	> 3 years
Warranty	12 month

Housing

Housing material	ABS
Weight	< 6 g

Experts on Design-In
Angst+Pfister
Sensors and Power

Dimensions

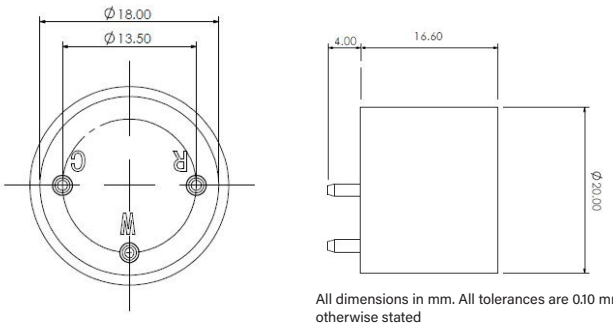

All dimensions in mm. All tolerances are 0.10 mm unless otherwise stated

Temperature curve

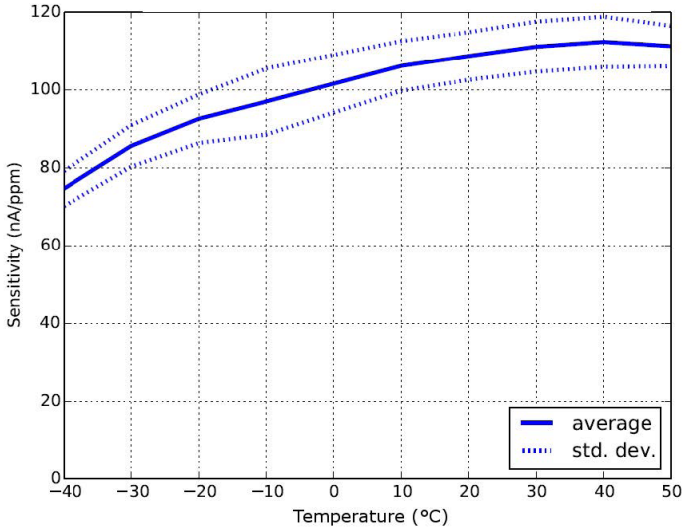

Experts on Design-In
Angst+Pfister Sensors and Power

Cross sensitivity

Gas	Formula	Test concentration (ppm)	Sensor reading (ppm)
Ammonia	NH_3	50	0
Carbon Dioxide	CO_2	1000	0
Carbon Monoxide	CO	50	3
Chlorine	Cl_2	10	-1.5
Hydrocarbons (unsaturated)			n.e.
Hydrogen	H_2	100	3
Hydrogen Cyanide	HCN	10	0
Isopropanol	C_3H_7OH	1000	n.e.
Nitric Oxide	NO	25	n.a.
Nitrogen Dioxide	NO_2	10	-2.2

DISCLAIMER: Sensor performance is temperature dependent. Performance data stated is based on test conditions with new sensors at 23°C, 50%rH and 1 atm, flow rate>150qcm/min using EC-Sense recommended circuitry. Cross sensitivity gases are not target gases. Relations and performance can change, also with ageing of the sensor. In the interest of continued product improvement, EC-Sense reserves the right to change design features and specifications without prior notification. We do not accept any legal responsibility for customer applications of our sensors. EC-Sense accepts no liability for any consequential losses, injury or damage resulting from the use of this document, the information contained within or from any omissions or errors herein. This document does not constitute an offer for sale and the data contained is for guidance only and may not be taken as warranty. Any use of the given data must be assessed and determined by the user thereof to be in accordance with federal, state and local laws and regulations. All specifications outlined are subject to change without notice.
WARNING: EC-Sense sensors are designed to operate in a wide range of harsh conditions. It is nevertheless essential to prevent exposure to high concentrations of solvent vapours during storage, assembly and operation. When using sensors on printed circuit boards (PCB's), degreasing agents should be used prior to the sensor being fitted. Please note that gluing or soldering direct to the pins of EC-Sense gas sensors will void any warranty. Please use PCB sockets when connecting EC-Sense sensors. Any electrochemical EC-Sense gas sensor can potentially fail to meet specification without warning. Despite the high reliability of our products, we recommend checking all sensors and instruments for response to gas before use, especially where life safety is a performance requirement of the product. At the end of the product's life, do not dispose of any electronic sensor, component or instrument in the domestic waste but contact EC-Sense or their distributor for disposal instructions. Customers should test under their own conditions to ensure that the sensors are suitable for their specific requirements.

Experts on Design-In
Angst+Pfister Sensors and Power

Angst+Pfister
Sensors and Power

We are here for you. Addresses and Contacts.

Headquarter Switzerland:

Angst+Pfister Sensors and Power AG
Thurgauerstrasse 66
CH-8050 Zurich
Phone +41 44 877 35 00
sensorsandpower@angst-pfister.com

Office Germany:

Angst+Pfister Sensors and Power Deutschland GmbH
Edisonstraße 16
D-85716 Unterschleißheim
Phone +49 89 374 288 87 00
sensorsandpower.de@angst-pfister.com

Scan here and get an overview of personal contacts!

sensorsandpower.angst-pfister.com