SGX SENSORTECH

VQ1
Combustible Gas Detector Elements

To be read in conjunction with "Introduction to Pellistor Gas Sensors" and Pellistor Application Notes 1, 2, 3, 4, 6 and 7.

INTRODUCTION

The VQ1 consists of two matched elements which are used for the detection of combustible gases, particularly methane in air mixtures in concentrations from 0.1% upwards. There is no interference from water vapour or carbon dioxide. Using the recommended bridge circuit (see below) and the mounting arrangement shown on page 2, the minimum sensitivity is 20 mV/% methane.

GENERAL DATA

Electrical

The information given below relates to the VQ1 operating in the recommended circuit shown.

Operation (see note 1)	continuous
Bridge supply	2.0 ± 0.1 V
Bridge power consumption	0.75 W max
Minimum sensitivity (see note 2)	20 mV/% methane
Linearity	linear up to 3% methane
Response time to register 1 $^1/_4$% in a 2 $^1/_2$% concentration (see notes 2 and 3)	2 seconds
Maximum methane concentration (see note 4)	10 %

Mechanical

Mounting	see page 2
Outline	see page 2
Shock test	250 g, 5 blows in each plane
Vibration test	20 g, 24 cycles from 100 to 3200 Hz

MARKING

Each element carries a serial number sleeve, fitted to one of the flexible leads. The number is in standard colour code (see table), reading from the base towards the free end of the lead.

Colour Code

Black	0	Yellow	4	Grey	8
Brown	1	Green	5	White	9
Red	2	Blue	6		
Orange	3	Violet	7		

The detector bead is dark in colour and has a red sleeve on the second lead. This sleeve carries a letter code which, together with the serial number, fully identifies a pair of elements.

The compensator bead is white and carries a black sleeve on the second lead.

NOTES

1. Operation may be under either direct flow or diffusion conditions in appropriate mountings (see page 2).
2. With open-circuit conditions at the bridge output.
3. The response time is a function of the type of mounting used.
4. If the VQ1 is exposed to greater than 5% methane concentration, the calibration of the instrument should be checked.
5. The elements are supplied as a matched pair with a trimming resistor R of the correct value which is between 39 and 120 Ω. The trimming resistor is to be connected across the compensator element as shown below.
6. The elements must be protected from certain organic and silicone vapours by suitable filtering, and caution should be exercised when operating in close proximity to hot, oily machinery.

BRIDGE CIRCUIT

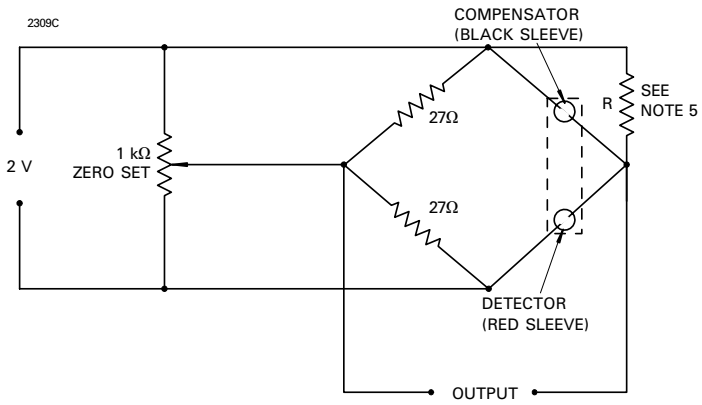

Experts on Design-In
Angst+Pfister Sensors and Power

OUTLINE
(All dimensions without limits are nominal)

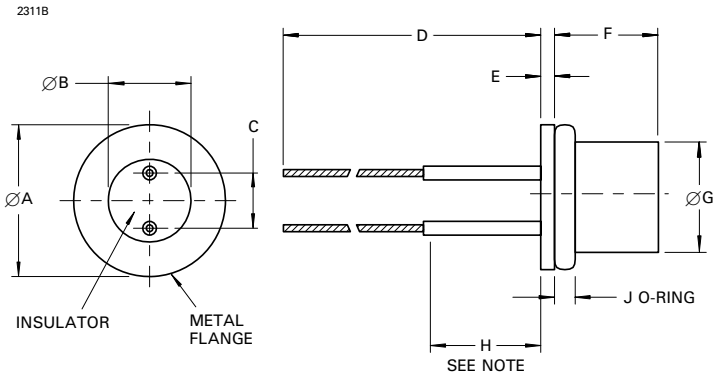

Ref	Inches	Millimetres
A	0.435 ± 0.010	11.05 ± 0.25
B	0.240 ± 0.010	6.10 ± 0.25
C	0.140 ± 0.005	3.56 ± 0.13
D	2.500 min	63.5 min
E	0.040	1.02
F	0.230 ± 0.020	5.84 ± 0.51
G	0.323 max	8.20 max
H	0.375	9.53
J	0.060	1.52

Millimetre dimensions have been derived from inches.

Note No bends may be made in this length.

RECOMMENDED MOUNTING ARRANGEMENTS

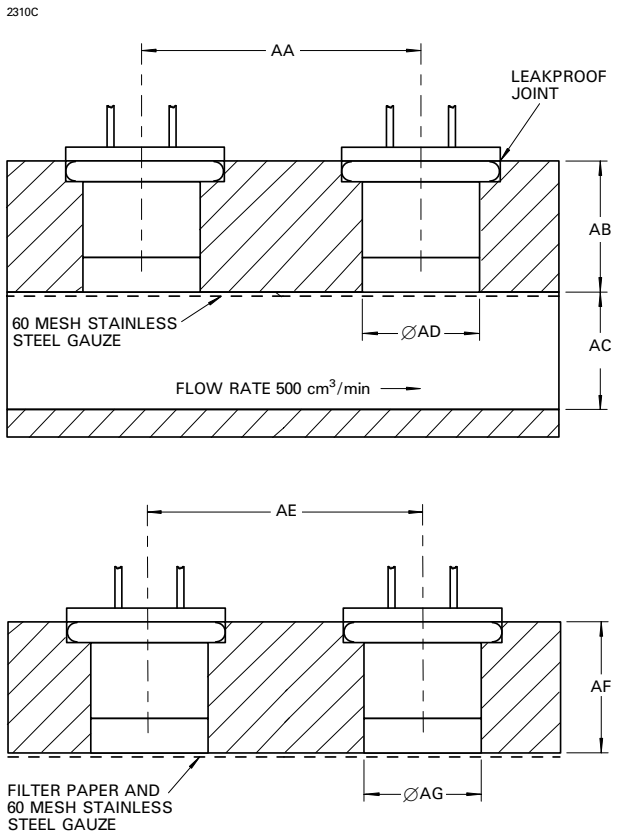

Ref	Inches	Millimetres
AA	0.750 max	19.05 max
AB	0.375 ± 0.005	9.53 ± 0.13
AC	0.328 ± 0.005	8.33 ± 0.13
AD	0.323 min	8.20 min
AE	0.750 max	19.05 max
AF	0.375 ± 0.005	9.53 ± 0.13
AG	0.323 min	8.20 min

Millimetre dimensions have been derived from inches.

Experts on Design-In
Angst+Pfister Sensors and Power

Angst+Pfister
Sensors and Power

We are here for you. Addresses and Contacts.

Headquarter Switzerland:

Angst+Pfister Sensors and Power AG
Thurgauerstrasse 66
CH-8050 Zurich
Phone +41 44 877 35 00
sensorsandpower@angst-pfister.com

Office Germany:

Angst+Pfister Sensors and Power Deutschland GmbH
Edisonstraße 16
D-85716 Unterschleißheim
Phone +49 89 374 288 87 00
sensorsandpower.de@angst-pfister.com

Scan here and get an overview of personal contacts!

sensorsandpower.angst-pfister.com