Manual

ES1 + TB600B Series
HCHO Formaldehyde gas detection module

TB600B Series Gas Detection Module Manual

1.Product Overview

The TB600 gas detection module is used together with a EC Sense solid polymer ES1 gas sensor, which has the smallest volume of electrochemistry solution in the world. The ES1 sensors can detect toxic & harmful gaseous elements in air, and achieve accurate monitoring of air pollution gases. The UART digital signal output interface from the TB600 module will easen significantly the use and calibration of the ES1 sensor. The TB600 series gas detection module includes 6 series for detecting of H_2, CO, H_2S, HCHO, TVOC gas and air quality. It is widely used in industrial & commercial applications; for instance in safety monitoring with oil & gas, chemistry, metallurgy and energy production. Other applications include environmental air quality monitoring field such as air pollution assessment, toxic and harmful gas emissions.

2.Products Features

- ★ High precision, long lifetime, low temperature resistance
- ★ Fast response, quick zero recovery, sensor functionality test when starting up, no warm-up time
- ★ UART Digital signal output
- ★ Durable and reliable of solid polymer electrochemical sensors
- ★ Excellent accuracy, repeatability & linearity
- ★ Excellent long-term stability
- ★ Immune towards electromagnetic interference
- ★ Fixed mounting hole, easy installation

3.Product appearance and structure

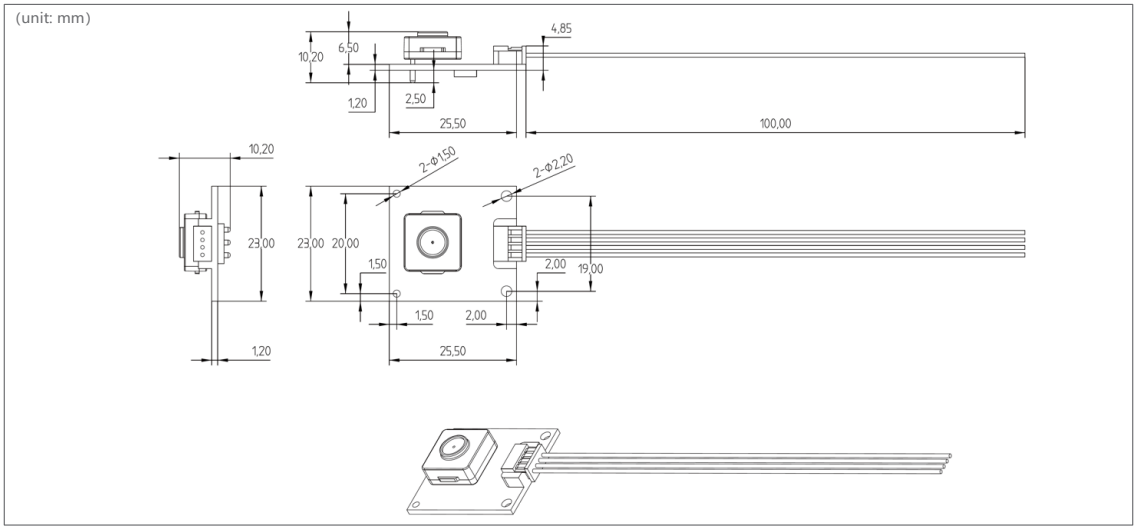

4. Principle

The solid polymer electrochemical sensing technology is a revolutionary innovation within electrochemical detection technology field. The principle is based on the of electrochemical gas detection, which is used to detect gases that can be chemically decomposed.

The sensor consists of 3 electrodes in contact with the solid polymer electrolyte. The electrodes are typically large surface area noble metals and other matrix materials. The electrode/electrolyte/air system, together with the diffusing gas into the working electrode, generates electrical charges in the system.

The gas is either oxidized or reduced in the reaction with the electrode. The electrochemical reaction generate the electricity flowing through the external circuit

The TB600 conditions and amplifies the small-current signal from the sensor. The outer circuit maintains the voltage across the sensor and the voltage of a two-electrode reverse reference sensor, an opposite reaction is produced at the reverse electrode, as the working electrode is oxidized while the opposite electrode is reduced. The solid polymer sensor output signal is a linear proportional to the gas concentration, and the linear output of a solid polymer sensor is one of many advantages over others technical sensor principles. Other sensors need to be linearized calibration before output. A linear output senor can detect low concentration gas accurately, and is easy to calibrate (only zero pointand one targetpoint is needed for the calibration). Once the solid polymer electrochemical sensor is calibrated, the signal output is stable over time.

Linear repeatability test of formaldehyde sensor

Environment temperature: 19℃; Environment humidity: 50%; Air chamber volume: 25cm³; Vent flow rate of the distribution system: 6000sccm

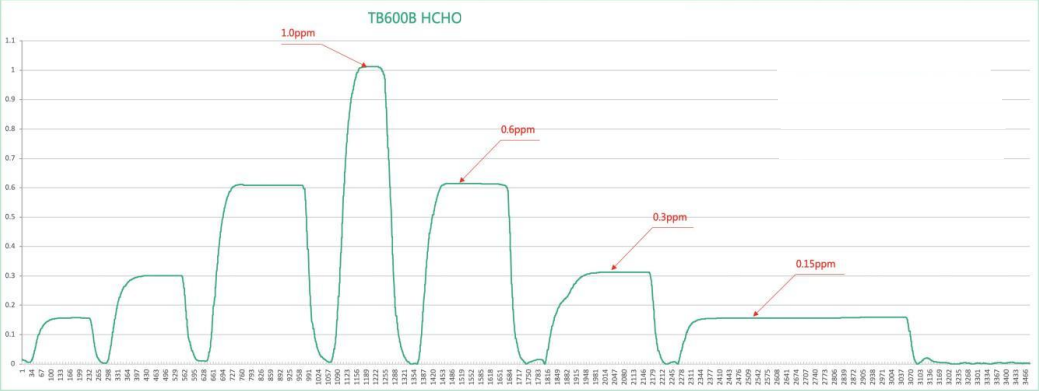

Formaldehyde sensor Continuous zero point stability test over 20 hours

Environment temperature: 19℃; Environment humidity: 45%; Environment space: 3mclean room
Turn on the fresh air system and air purifier before the test to ensure relatively clean air indoor.

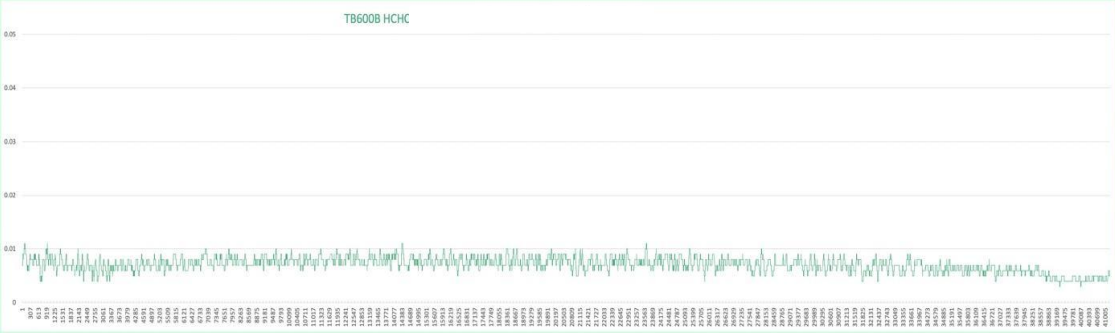

Formaldehyde sensor Conformance test & 0.1 PPM formaldehyde gas range stability test

Environment temperature: 19℃; Environment humidity: 50%; Air chamber space: 25cm3; Vent flow rate of the distribution system: 7000sccm;
Formaldehyde gas concentration: 0.1ppm

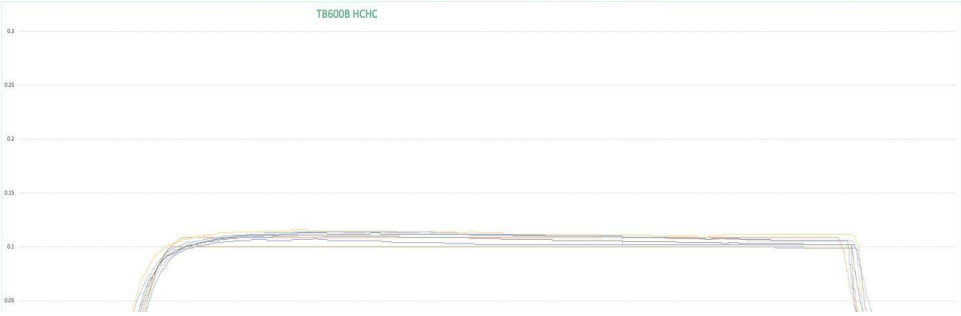

5.Specification

• Detection Principle	EC Sense solid polymer electrochemical detection technology
Part number	TB600B-HCHO-1ppm；
Gas	Formaldehyde
Detection range	0-1 ppm， Maximum load range： 2 ppm；
Minimum detection	0.01 ppm
Linear accuracy error	0.08 ppm error ± 5 ppb； 0.15 ppm error ± 8 ppb； 0.30 ppm error ± 10 ppb； Above 0.60 ppm error ± 20ppb；
Warm-up time	Store in clean air, first power on<60s
Response time	< 3 seconds (T50: < 40 s； T90: < 80 s； T100: < 120 s)
Reset time	0.10 ppm reset time < 40 s； 0.15 ppm reset time < 60 s； 0.30 ppm reset time < 80 s； 0.60 ppm reset time < 120 s；
Calibration material	0.6 ppm range： 0.3 ppm Formaldehyde gas calibration; 1 ppm range： 0.6 ppm Formaldehyde gas calibration；
Lifetime expectancy	Over 3 years in clean air (temperature range 0-25℃ & humidity range 30-70%
Safety alarm value	First class： 0.05 ppm sensitization； second class： 0.08 ppm carcinogenesis
Relative temperature error	±0.2℃ （typical value）
Relative humidity error	±2% （typical value）
Output signal	3.3V level UART digital signal (See below for communication protocol)
Get data command	Interface definition: VCC- red, GND- black, RX- yellow, TX- green; Poter rate: 9600, data bits: 8 bits, stop point: 1 bit； For the convenience of user testing, factory default for active upload, concentration value is upload every 1 second Gas concentration = high gas concentration *256+ low gas concentration. See details in 《TB600 Gas detection module series operating instructions 》
Working voltage	4.5-5.5 VDC
Working current	5 mA @ 5 VDC
Power consumption	25mW @ 5 VDC
Accuracy	±5% FS
Repeatability	±1% FS
Operating temperature	-20~55 ℃
Optimum operating temperature	25 ℃
Operating humidity	10-95 %RH
Optimum operating humidity	50 %RH
Operating pressure	Barometric pressure ± 10%
Circuit board size	23 x 25.5 x 10.2 mm （with sensor）
Circuit board size	23 x 25.5 x 4.85mm （without sensor）
Weight	3.1 g
Signal line	Standard length is shown in the figure. It can be customized for special requirements

Selection table :

Product name	Order number	Detection range	Index resolution
TB600B type Formaldehyde gas detection module	TB600B-HCHO-1ppm	0-1ppm	0.001ppm

6.Communication protocol

6.1 User Communication Protocol

6.1.1 General Settings

The sensor module uses serial communication, and the communication configuration parameters are as follows：

Baud rate	9600
data bits	8 Bits
Stop bit	1 Bit
parity bit	None

6.1.2 Communication command

Communication both of automation upload and question and answer mode, Factory acquiesced automation upload, interval 1s send concentration value.

The command line format as follow:

0	**1**	**2**	**3**	**4**	**5**	**6**	**7**	**8**
Start bit	command	High gas concentration (ug/m3)	Low gas concentration (ug/m3)	Full range high	Full range low	High gas concentration (ppb)	Low gas concentration (ppb)	proof test value
0xFF	0x86	0x00	0x2A	0x00	0x00	0x00	0x20	0x30

Gas concentration value = high gas concentration *256+ low gas concentration;

(The high and low concentration should be converted from hexadecimal to decimal before being substituted into this formula)

Switch to question and answer mode, the command line format is as follows ：

0	**1**	**2**	**3**	**4**	**5**	**6**	**7**	**8**
start bit	retain	Switch command	answer	retain	retain	retain	retain	proof test value
0xFF	0x01	0x78	0x41	0x00	0x00	0x00	0x00	0x46

Switch to active upload and the command line format is as follows:

0	1	2	3	4	6	7	8
start bit	retain	Switch command	answer	retain	retain	retain	proof test value
0xFF	0x01	0x78	0x40	0x00	0x00	0x00	0x47

The read gas concentration format is as follows ：

0	1	2	3	4	5	6	7	8
start bit	retain	Switch command	answer	retain	retain	retain	retain	proof test value
0xFF	0x01	0x86	0x00	0x00	0x00	0x00	0x00	0x79

The sensor return value format is as follows ：

0	1	2	3	4	5	6	7	8
Start bit	command	High gas concentration (ug/m3)	Low gas concentration(ug/m3)	Full range high	Full range low	High gas concentration(ppb)	Low gas concentration (ppb)	proof test value
0xFF	0x86	0x00	0x2A	0x00	0x00	0x00	0x20	0x30

Gas concentration value = high gas concentration *256+ low gas concentration

(The high and low concentration should be converted from hexadecimal to decimal before being substituted into this formula)

6.2 Get module information instruction

Get sensor type, maximum range, unit, unit decimal number instruction：0xD1

returned value：

0	1	2	3	4	5	6	7	8
Sensor style	Maximum range high	Maximum range low	unit	retain	retain	retain	Data decimal (bit[4]~bit[7]| Data sign (bit[0]~bit[3])	parity bit
0x17	0x00	0XC8	0x02	0x00	0x00	0x00	0x01	0x1E

check sum calculator

* functional description：summation check（Take to send、Receiving agreement 1\2\3\4\5\6\7 and opposite of +1）

* Function description：The number of elements in the group 1- the second last element is added and then inverted +1（The number of elements must be more than 2）

```
unsigned char FucCheckSum(unsigned char *i, unsigned char ln)
{
unsigned char j, tempq=0;
i+=1;
for(j=0; j<(ln-2); j++)
{
tempq+=*i;
i++;
}
tempq=(~tempq)+1;
return(tempq);
}
```

6.3 Into sleep mode

Order:

0	1	2	3	4	5
0XAF	0X53	0X6C	0X65	0X65	0X70

Return:

0	1
0X4F	0X4B

Exit sleep mode

Order:

0	1	3	4
0XAE	0X45	0X69	0X74

Return:

0	1
0X4F	0X4B

Remark: After exiting the sleep mode, it takes 5 seconds to recover, and there is no data within 5 seconds.

Get current temperature and humidity

Order

:0xD2

Return:

0	1	2	3
8 bit higher temperature	8 bit lower temperature	8 bit higher humidity	8 bit lower humidity
0X0A	0X09	0X11	0XF4

The temperature is signed with two decimal data, the unit is ℃. The pseudocode calculation formula is

T = (float)((int)((0x0A<<8)|0x09))/100

The humidity is signed with two decimal data, the unit is (rh%). The pseudocode calculation formula is

Rh = (float)((uint)((0x0A<<8)|0x09))/100

7.Package List

No.	Items	Unit	Quantity	Remark
1	Gas detection module	set	1	
2	Cable	pcs	1	

8.Maintenance

8.1 General operating instructions

- Do not drop sensor and board and do subject the sensor and board to any large shock or vibration
- Do not replace the electrical components trying to repair a broken circuit board
- Do not subject sensor and board to sudden heat changes
- Avoid using and storing the gas detection module (including sensor) in dusty areas
- Do not use chemicals, cleaning agents or concentrated detergents to clean the gas detection module

8.2 Fault analysis

Question	Possible reason	Solution
No reaction to gas	1) Sensor film is dirty or clogged 2) Sensor failure	1) Replace the sensor or try to blow the sensor clean 2) Replace the sensor
No signal output	1) The output wiring is not connected correctly 2) The power supply is broken 3) The power cable connection is not good	1) Reconnect the output cable 2) Measure the voltage value of the power supply 3) Reconnect the power cord
The output value i over or less than 0 i the absence of th measured gas	1) Zero drift 2) Temperature deviations are causing zero deviation 3) Interference gas in the site environment	Pass nitrogen and test if the output is correct. If not, correct the zero point
The output value constantly fluctuates and cannot be stabilized.	1) The condition of the cable is not good 2) High frequency interference 3) High voltage interference	1) Check cable 2) Move the module to another environment and observe whethe the output value is stable

9.1 Sensor storage：

9.1.1 The best environment conditions for TB600B formaldehyde sensor module storage: temperature 5 ℃ ~25 ℃, relative humidity 25% ~ 50% (condensation);

9.1.2 The storage environment shall be kept clean with no pollution gas, high concentration organic gas, dust and smoke.

9.1.3 Avoid storage with liquid and solid states of alcohol (ethanol), perfume, sodium silicate and polyurethane components.

9.2 Packaging and transportation of sensors：

9.2.1 Transport packaging should be shockproof bubble film or no odor environmental friendly sponge

9.2.2 During long-term and long-distance transportation process, temperature inside sensor packaging should be kept below 50 ℃, the highest temperature should not exceed 55 ℃ ;

9.3 Sensor usage：

9.3.1 The main function of the gas sensor is to detect the composition and content of the HCHO gas, avoid liquid contact with any parts of sensor

9.3.2 The three pin electrodes of the sensor should not be connected reversely. Reverse connection may lead to permanent damage of the internal electrode of the sensor due to high current.

9.3.3 Avoid long-time exposure with HCHO gas concentrations beyond the upper measurement limit of the sensor (1 ppm).

9.3.4 The white or yellow sheet on the sensor is waterproof and breathable film, please pay attention not to scratch it off or to damage it.

9.3.5 The ventilation surface of the sensor should not be blocked or contaminated. Sometimes, blockage is the reason for the reduced sensitivity and response time;

9.3.6 When using the sensor in the condition of pumping and suction detection, the gas flow shall be controlled within 400ml-800ml per minute;

9.3.7 Avoid measured gas blowing from the front side when determining the gas sensitivity, and use the standard gas cap with both inlet and outlet (small inlet and large outlet in normal conditions).

9.3.8 The pin should not be broken or bent; the internal structure of the sensor may be damaged

9.3.9 Avoid excessive impact or vibration. If the shell is damaged, please make sure the structure is intact. If the shell is cracked and the internal structure is exposed, the output is not reliable anymore (the signal may be too large, too small or with no output).

9.3.10 It takes time to recover to the initial state after long-term use in high concentration gas environment, and the recovery speed is proportional to the multiple of the over range

9.3.11 Avoid long-term contact with high concentration and strong viscosity of the gas when the sensor works in a low range below 2ppm

9.3.12 Please do not disassemble the sensor; it will damage the sensor

9.3.13 There is not need to do electrical level pin short connection for EC Sense sensor

9.3.14 ES1 series sensor pin can be directly welded (temperature should not be too high < 300 ° C, and the shorter the duration the better, high temperature and long contact time can cause internal physical damage)

9.3.15 Calibration and testing, the electrochemical gas sensor and reactivity of target gas will change over time with temperature and humidity, and they are detected using the relative comparison method: Use a zero and a standard concentration gas to calibrate linear change for a standard curve. When measuring, compare the electrical signals generated from target gas with that generated from standard gas to calculate the accurate gas density. Therefore, zero calibration of equipment at any time and constant calibration of equipment are necessary to ensure accurate measurement.

9.3.16 Cross-interference of sensors. Generally speaking, each sensor corresponds to a specific detection gas, but no gas sensor can be absolutely specific. Therefore, when using the gas sensor, the interference of other gases should be avoided to ensure the accurate detection of the specific gas.

9.4 Sensor quality inspection

9.4.1 Each sensor module (ES1+TB600B) is thoroughly inspected , tested and protocolled

9.4.2 All formaldehyde modules are ventilated and calibrated through formaldehyde standard gas to ensure the consistency and accuracy of the sensor.

9.5 Special remarks

9.5.1 When the TB600B Formaldehyde sensor module is electrically disconnected for a long time, it needs a certain time for correct operation when it is powered on. Generally, in the condition of clean air, the stable time of the sensor can reach optimal working state within 3 minutes.

9.5.2 During on-site detection of formaldehyde gas, the interference of other on-site gases on the formaldehyde sensor should be avoided or it may lead to a larger error rate of detection results;

9.5.3 To ensure the long life of the sensor and the best working state, the sensor should be kept in the continuous power state (if possible) due to the characteristics of the electrochemical sensor,

9.5.4 Formaldehyde gas detection module shall not be stored and used in conditions with humidity below 10% and temperature above 60 ° C degrees

9.5.5 When the formaldehyde sensor module encounters high concentration gas in use, such as formaldehyde gas, ethanol gas and volatile organic gas, the normal recovery time is slow, and the recovery time can be shortened by placing in a clean air environment.

Angst+Pfister
Sensors and Power

We are here for you. Addresses and Contacts.

Headquarter Switzerland:

Angst+Pfister Sensors and Power AG
Thurgauerstrasse 66
CH-8050 Zurich
Phone +41 44 877 35 00
sensorsandpower@angst-pfister.com

Office Germany:

Angst+Pfister Sensors and Power Deutschland GmbH
Edisonstraße 16
D-85716 Unterschleißheim
Phone +49 89 374 288 87 00
sensorsandpower.de@angst-pfister.com

Scan here and get an overview of personal contacts!

sensorsandpower.angst-pfister.com