PROTEK POWER

150-200 WATT ITE POWER SUPPLIES

DESCRIPTION

The PU201 series comprising single and multiple output models for 150 to 200 watts of continuous output power is specially designed for ITE and industrial applications. They operate at 90 to 264 VAC input voltage without the need of a selector strap. All auxiliary outputs are with magnetic amplifier linear regulator to keep regulation. The units are constructed on a printed circuit board with a U-bracket for mechanical support and heat sinking. A cover-and-fan assembly can be added during manufacturing.

PU201 SERIES

CE (LVD)

RoHS

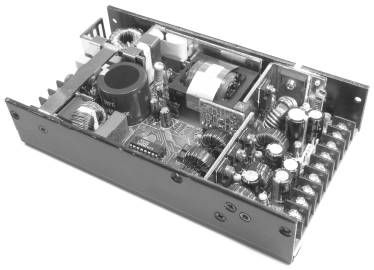

FEATURES

- Meet EN55022 and FCC Class B
- Power Factor 0.98 typical
- Short-circuit protection
- Power Fail Detect (PFD) signal
- 100% burn-in at full rated load
- Optional cover-and-fan assembly
- Remote inhibit - TTL high to disable output
- Compliant with RoHS requirements

SAFETY STANDARD APPROVALS

UL 60950-1
File No. E137410

TÜV EN60950-1

INPUT SPECIFICATIONS

Input voltage:	90-264 VAC
Input frequency:	47-63 Hz
Input current:	3.20 A (rms) for 115 VAC 1.60 A (rms) for 230 VAC
Earth leakage current:	220 µA max. @ 264 VAC, 63 Hz

OUTPUT SPECIFICATIONS

Output voltage/current:	See rating chart.
Maximum output power:	See rating chart.
Ripple and noise:	1% peak to peak maximum
Overvoltage protection:	Provided on output #1 only; set at 112-132% of its nominal output voltage
Overcurrent protection:	All outputs protected to short circuit conditions
Temperature coefficient:	All outputs ±0.04% /℃ maximum
Transient response:	Maximum excursion of 4% or better on all models, recovering to 1% of final value within 500 us after a 25% step load change
Fan power:	12 V at 200 mA maximum, except 24 V at 200 mA maximum for PU201-25B and PU201-27B, and 5 V at 380 mA maximum for PU201-40-3B

INTERFACE SIGNALS

PFD:	TTL logic high for normal operation and TTL logic low upon loss of input power. This signal appears at least 1ms prior to +5 V output dropping 5% below its nominal value. This signal also provides a minimum delay of 100 ms after +5 V is within regulation.
Inhibit:	Requires an external TTL high level signal to inhibit outputs for standard models

ENVIRONMENTAL SPECIFICATIONS

Operating temperature:	0□ to +70□
Storage temperature:	-40□ to +85□
Relative humidity:	5% to 95% non-condensing
Derating:	Derate from 100% at +50□ linearly to 50% at +70□
Cooling:	10.8 CFM forced air provided on “C” version; 25 CFM forced air to be provided for “B” version by user.

GENERAL SPECIFICATIONS

Switching frequency:	88-112 KHz
Efficiency:	70% minimum on all models
Hold-up time:	20 ms minimum at 110 VAC
Line regulation:	±0.5% maximum at full load
Inrush current:	20 A @ 115 VAC or 40 A @ 230 VAC, at 25℃ cold start
Withstand voltage:	3000 VAC from input to output, 1500 VAC from input to ground, 500 VAC from output to ground
MTBF:	350,000 hours at full load at 25℃ ambient, calculated per MIL-HDBK-217F
EMC Performance	
EN55022:	Class B conducted, class B radiated
EN61000-3-2:	Harmonic distortion, class A and D
EN61000-3-3:	Line flicker
EN61000-4-2:	ESD, ±8 KV air and ±4 KV contact
EN61000-4-3:	Radiated immunity, 3 V/m
EN61000-4-4:	Fast transient/burst, ±1 KV
EN61000-4-5:	Surge, ±1 KV diff., ±2 KV com.
EN61000-4-6:	Conducted immunity, 3 Vrms
EN61000-4-8:	Magnetic field immunity, 1 A/m
EN61000-4-11:	Voltage dip immunity, 30% reduction for 500 ms and >95% reduction for 10 ms

Experts on Design-In
Angst+Pfister Sensors and Power

UNIVERSAL INPUT PU201 ITE SERIES

OUTPUT VOLTAGE/CURRENT RATING CHART

Model[1]	Output #1 [4]				Output #2 [2][4]				Output #3				Output #4 [3]				Max. Output Power[4]
	V1	Imin.	Imax.	Tol.	V2	Imin.	Imax.	Tol.	V3	Imin.	Imax.	Tol.	V4	Imin.	Imax.	Tol.	
PU201-10B	5.1 V	3.0 A	35.0 A	±2%	(N/A)				(N/A)				(N/A)				87.5 W / 175 W
PU201-10-3B	3.3 V	3.0 A	46.0 A	±3%	(N/A)				(N/A)				(N/A)				75 W / 150 W
PU201-12B	12 V	1.2 A	16.7 A	±2%	(N/A)				(N/A)				(N/A)				100 W / 200 W
PU201-13B	15 V	1.0 A	13.4 A	±2%	(N/A)				(N/A)				(N/A)				100 W / 200 W
PU201-14B	24 V	0.6 A	8.4 A	±2%	(N/A)				(N/A)				(N/A)				100 W / 200 W
PU201-16B	30 V	0.5 A	6.7 A	±2%	(N/A)				(N/A)				(N/A)				100 W / 200 W
PU201-18B	48 V	0.5 A	4.2 A	±2%	(N/A)				(N/A)				(N/A)				100 W / 200 W
PU201-23B	+5.1 V	3.0 A	30.0 A	±2%	+12 V	0 A	8 A	±4%	(N/A)				(N/A)				100 W / 200 W
PU201-24B	+5.1 V	3.0 A	30.0 A	±2%	+15 V	0 A	6 A	±4%	(N/A)				(N/A)				100 W / 200 W
PU201-25B	+5.1 V	3.0 A	30.0 A	±2%	+24 V	0 A	4 A	±4%	(N/A)				(N/A)				100 W / 200 W
PU201-27B	+12 V	1.0 A	8.7 A	±2%	+24 V	0 A	4 A	±4%	(N/A)				(N/A)				100 W / 200 W
PU201-30B	+5.1 V	3.0 A	30.0 A	±2%	+12 V	0 A	8 A	±4%	-5 V	0 A	6 A	±4%	(N/A)				100 W / 200 W
PU201-31B	+5.1 V	3.0 A	30.0 A	±2%	+12 V	0 A	8 A	±4%	-12 V	0 A	4 A	±4%	(N/A)				100 W / 200 W
PU201-32B	+5.1 V	3.0 A	30.0 A	±2%	+15 V	0 A	6 A	±4%	-15 V	0 A	4 A	±4%	(N/A)				100 W / 200 W
PU201-33B	+5.1 V	3.0 A	30.0 A	±2%	+15 V	0 A	6 A	±4%	-12 V	0 A	4 A	±4%	(N/A)				100 W / 200 W
PU201-36B	+5.1 V	3.0 A	30.0 A	±2%	+12 V	0 A	8 A	±4%	24 V	0 A	4 A	±4%	(N/A)				100 W / 200 W
PU201-40B	+5.1 V	3.0 A	30.0 A	±2%	+12 V	0 A	8 A	±4%	-12 V	0 A	4 A	±4%	5 V	0 A	6 A	±4%	100 W / 200 W
PU201-41B	+5.1 V	3.0 A	30.0 A	±2%	+15 V	0 A	6 A	±4%	-15 V	0 A	4 A	±4%	24 V	0 A	4 A	±4%	100 W / 200 W
PU201-42B	+5.1 V	3.0 A	30.0 A	±2%	+12 V	0 A	8 A	±4%	-12 V	0 A	4 A	±4%	12 V	0 A	4 A	±4%	100 W / 200 W
PU201-44B	+5.1 V	3.0 A	30.0 A	±2%	+12 V	0 A	8 A	±4%	-15 V	0 A	4 A	±4%	15 V	0 A	4 A	±4%	100 W / 200 W
PU201-45B	+5.1 V	3.0 A	30.0 A	±2%	+12 V	0 A	8 A	±4%	-12 V	0 A	4 A	±4%	24 V	0 A	4 A	±4%	100 W / 200 W
PU201-40-3B	+3.3 V	3.0 A	30.0 A	±3%	+5.1 V	0 A	8 A	±4%	-12 V	0 A	4 A	±4%	12 V	0 A	4 A	±4%	87.5 W / 175 W

NOTES:

1. Suffix "B" in model numbers denotes U-bracket form. Change "B" to "C" for enclosed form with cover-and-fan assembly, e.g. PU201-45C.
2. Peak output current is 12 A on +12 V, 9 A on +15 V and 6 A on +24 V.
3. Output #4 is floating. It can be connected externally for positive or negative output.
4. 200 watts for "C" version with a cover-and-fan assembly. 100 watts for "B" version without moving air (maximum current of output #1 & #2 derated to 50%), or 200 watts with 25 CFM forced air provided by user.
5. When the remote Sense facility is not used, +Sense must be connected to +V, and -Sense to return, on P2 connector.
6. All models may be operated at no-load. At no-load, output voltage tolerance increases to ±10%.
7. Ripple and noise is maximum peak-to-peak voltage value measured at output within 20 MHz bandwidth, at rated line voltage and output load ranges, and with a 10 µF tantalum capacitor in parallel with a 0.1 µF ceramic capacitor across the output.

OUTPUT POWER DERATING CURVE

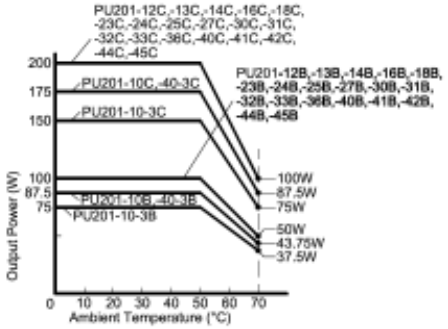

MECHANICAL SPECIFICATIONS

Single Output Models

U-bracket Form

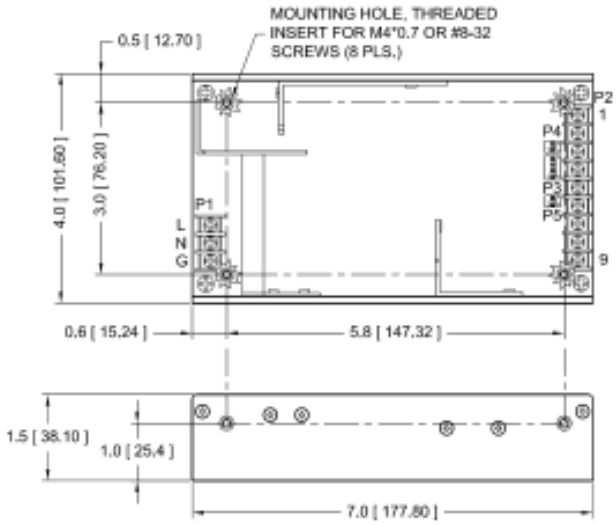

Enclosed Form

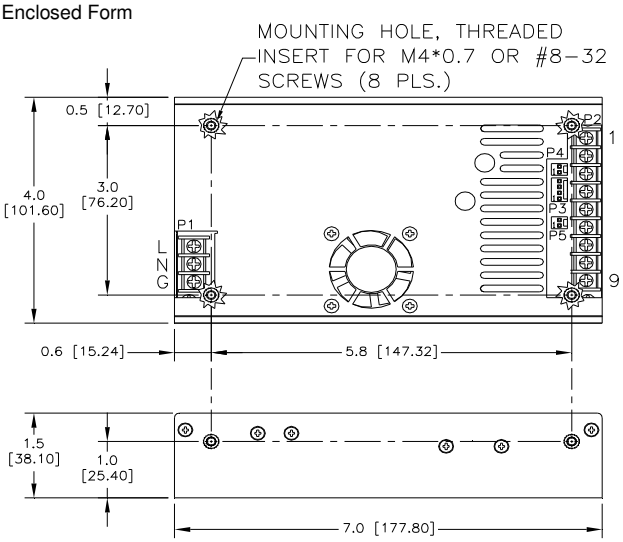

Experts on Design-In
Angst+Pfister Sensors and Power

UNIVERSAL INPUT PU201 ITE SERIES

MECHANICAL SPECIFICATIONS

Multiple Output Models

U-bracket Form

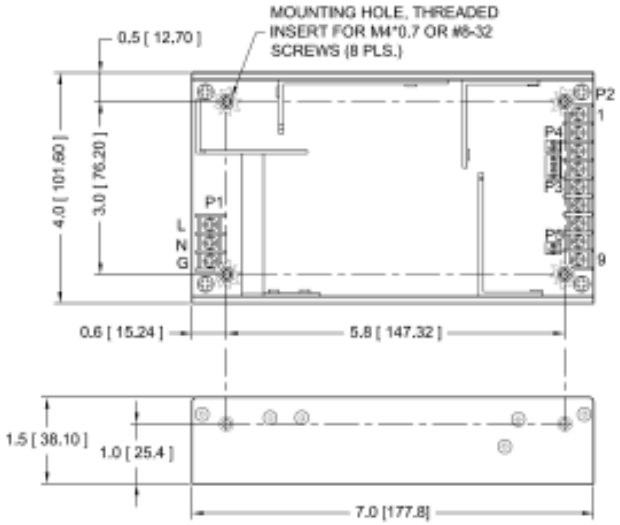

Enclosed Form

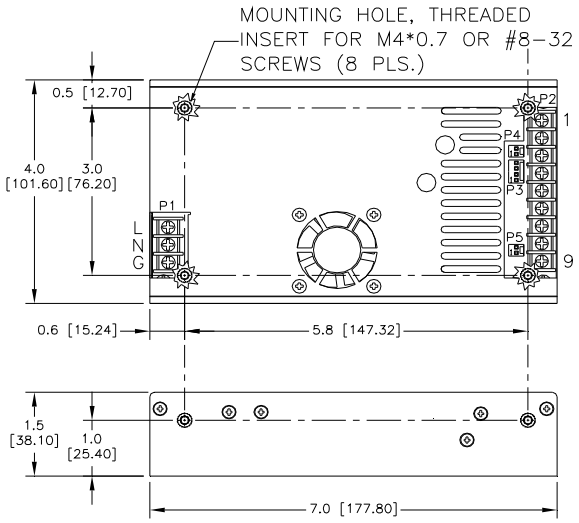

NOTES:

1. Dimensions shown in inches [mm]
2. Tolerance 0.02 [0.5] maximum
3. Input connector P1 is Dinkle DT-35-B01W-03. Output connector P2 is Dinkle DT-35-B01W-09. Screws are M3, nickel plated.
4. Connector P3 mates with Molex housing 22-01-1043 and Molex 40445 series crimp terminal.
5. Connectors P4 and P5 mate with Molex housing 22-01-1023 and Molex 40445 series crimp terminal.
6. P4 is for DC fan, 12 V/0.2 A rated, Pin 1 +V and Pin 2 -V; except 24 V/0.2 A rated for models PU201-25 and PU201-27, and 5 V/0.38 A rated for models PU201-40-3).
7. Weight: 820 grams (1.8 lbs.) approx. for U-bracket form, 960 grams (2.1 lbs.) approx. for enclosed form.
8. Maximum penetration depth of fixing screws is 4 mm from the outer surface of chassis.

PIN CHART

CONN / PIN / MODEL		P2									P3				P5	
		1	2	3	4	5	6	7	8	9	1	2	3	4	1	2
PU201-10B PU201-10-3B PU201-12B PU201-13B	PU201-14B PU201-16B PU201-18B	-Sense	Com. Ret.	Com. Ret.	Com. Ret.	Com. Ret.	+V1	+V1	+V1	+Sense	Fan +V	Com. Ret.	Com. Ret.	PFD	Inhibit +V	Inhibit -V
PU201-23B PU201-24B	PU201-25B PU201-27B	V1	V1	Com. Ret.	Com. Ret.	Com. Ret.	V2	N.C.	N.C.	N.C.	Fan +V	Com. Ret.	Com. Ret.	PFD	Inhibit +V	Inhibit -V
PU201-30B PU201-31B	PU201-32B PU201-33B	V1	V1	Com. Ret.	Com. Ret.	Com. Ret.	V2	V3	N.C.	N.C.	Fan +V	Com. Ret.	Com. Ret.	PFD	Inhibit +V	Inhibit -V
PU201-36B		V1	V1	Com. Ret.	Com. Ret.	Com. Ret.	V2	N.C.	V3 Return	+V3	Fan +V	Com. Ret.	Com. Ret.	PFD	Inhibit +V	Inhibit -V
PU201-40B PU201-41B PU201-42B	PU201-44B PU201-45B PU201-40-3B	V1	V1	Com. Ret.	Com. Ret.	Com. Ret.	V2	V3	V4 Return	+V4	Fan +V	Com. Ret.	Com. Ret.	PFD	Inhibit +V	Inhibit -V

Experts on Design-In
Angst+Pfister Sensors and Power

Angst+Pfister
Sensors and Power

We are here for you. Addresses and Contacts.

Headquarter Switzerland:

Angst+Pfister Sensors and Power AG
Thurgauerstrasse 66
CH-8050 Zurich
Phone +41 44 877 35 00
sensorsandpower@angst-pfister.com

Office Germany:

Angst+Pfister Sensors and Power Deutschland GmbH
Edisonstraße 16
D-85716 Unterschleißheim
Phone +49 89 374 288 87 00
sensorsandpower.de@angst-pfister.com

Scan here and get an overview of personal contacts!

sensorsandpower.angst-pfister.com