MEAN WELL

35W Single Output Switching Power Supply

APC-35 series

■ Features :

- Constant current mode power supply
- Universal AC input / Full range
- Withstand 300VAC Surge input for 5 seconds
- Protections:Short circuit / Over voltage
- Fully isolated plastic case
- Small and compact size
- Cooling by free air convection
- IP42 design
- 100% full load burn-in test
- Suitable for LED related fixture or appliance (such as LED Decoration or Advertisement devices)
- Low cost / High reliability
- 2 years warranty

SPECIFICATION

IS 15885(Part 2/Sec13) R-41027766 (only for APC-35-700) (only for APC-35-1050) IP42 LPS (except for APC-35-350,APC-35-500)

MODEL		APC-35-350	APC-35-500	APC-35-700	APC-35-1050
OUTPUT	RATED CURRENT	350mA	500mA	700mA	1050mA
	DC VOLTAGE RANGE	28~100V	25~70V	15~50V	11~33V
	RATED POWER	35W	35W	35W	34.7W
	RIPPLE & NOISE (max.) Note.2	350mVp-p	350mVp-p	350mVp-p	350mVp-p
	VOLTAGE TOLERANCE Note.3	±5.0%			
	CURRENT ACCURACY	±8.0%			
	LINE REGULATION	±1.0%			
	LOAD REGULATION	±3.0%			
	SETUP, RISE TIME	1500ms, 40ms / 230VAC 1500ms, 40ms / 115VAC at full load			
	HOLD UP TIME (Typ.)	20ms/230VAC 12ms/115VAC at full load			
INPUT	VOLTAGE RANGE Note.4	90 ~ 264VAC 127 ~ 370VDC			
	FREQUENCY RANGE	47 ~ 63Hz			
	EFFICIENCY(Typ.)	84%	84%	84%	84%
	AC CURRENT	0.5A/230VAC;0.75A/115VAC			
	INRUSH CURRENT(Typ.)	COLD START 45A(twidth=490μs measured at 50% Ipeak) at 230VAC			
	MAX. No. of PSUs on 16A CIRCUIT BREAKER	5 units (circuit breaker of type B) / 9 units (circuit breaker of type C) at 230VAC			
	LEAKAGE CURRENT	0.25mA / 240VAC			
PROTECTION	OVER VOLTAGE	110 ~ 130V	77 ~ 91V	55 ~ 65V	36 ~ 43V
		Protection type : Shut down o/p voltage, re-power on to recover			
ENVIRONMENT	WORKING TEMP.	-30 ~ 70℃ (Refer to "Derating Curve")			
	WORKING HUMIDITY	20 ~ 90% RH non-condensing			
	STORAGE TEMP., HUMIDITY	-40 ~ +80℃, 10 ~ 95% RH			
	TEMP. COEFFICIENT	±0.2%/℃ (0 ~ 50℃)			
	VIBRATION	10 ~ 500Hz, 2G 10min./1cycle, period for 60min. each along X, Y, Z axes			
SAFETY & EMC (Note 5)	SAFETY STANDARDS	UL8750 (only for APC-35-700&1050), CSA-C22.2 No. 250.0-13 (only for APC-35-1050), IP42 approved; design refer to EN60950-1			
	WITHSTAND VOLTAGE	I/P-O/P:3KVAC			
	ISOLATION RESISTANCE	I/P-O/P:>100M Ohms / 500VDC / 25℃/ 70% RH			
	EMC EMISSION	Compliance to EN55032,EN61000-3-2 Class A,EN61000-3-3			
	EMC IMMUNITY	Compliance to EN55024,EN61000-4-2,3,4,5,6,8,11; light industry level(surge 2KV), criteria A			
OTHERS	MTBF	518.9K hrs min. MIL-HDBK-217F (25℃)			
	DIMENSION	84*57*29.5(L*W*H)			
	PACKING	0.18Kg; 72pcs/14Kg/0.92CUFT			
NOTE	1. All parameters NOT specially mentioned are measured at 230VAC input, rated load and 25℃ of ambient temperature. 2. Ripple & noise are measured at 20MHz of bandwidth by using a 12" twisted pair-wire terminated with a 0.1uf & 47uf parallel capacitor. 3. Tolerance : includes set up tolerance, line regulation and load regulation. 4. Derating may be needed under low input voltage. Please check the static characteristic for more details. 5. The power supply is considered as a component that will be operated in combination with final equipment. Since EMC performance will be affected by the complete installation, the final equipment manufacturers must re-qualify EMC Directive on the complete installation again. 6.The unit might not be suitable for lighting applications in EU countries. Please check with your local authorities for the possible use of the unit.				

Experts on Design-In

Angst+Pfister Sensors and Power

MEAN WELL 35W Single Output Switching Power Supply **APC-35 series**

■ Mechanical Specification

Case No.PCD16A Unit:mm

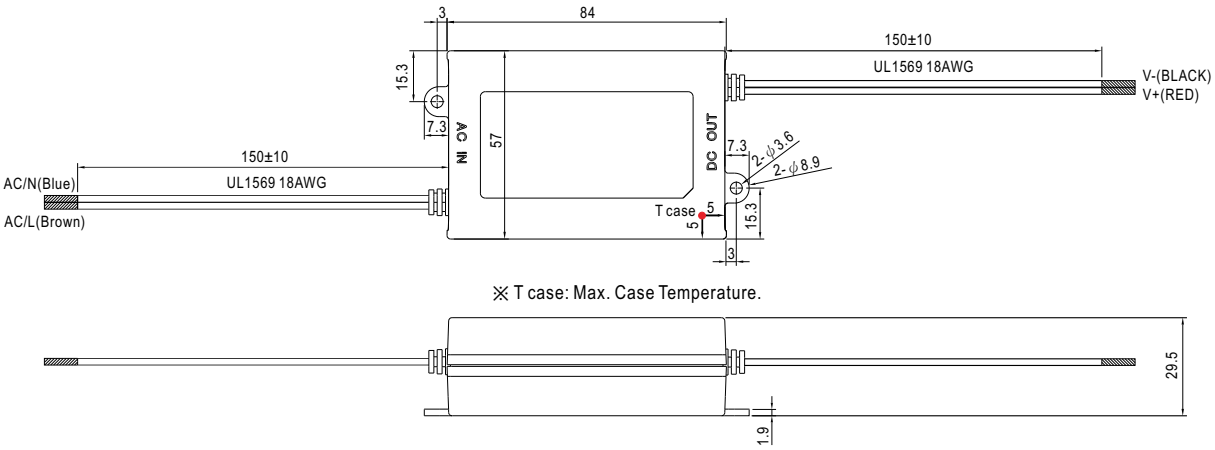

■ Block Diagram

fosc : 60KHz

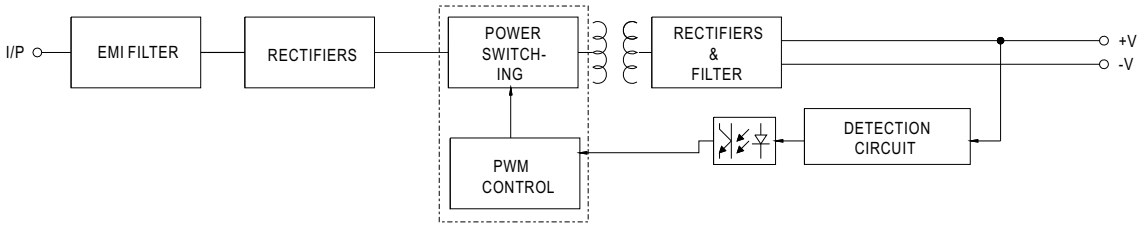

■ Derating Curve

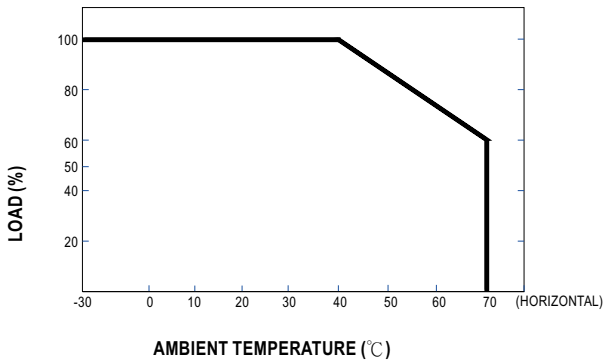

■ Static Characteristics

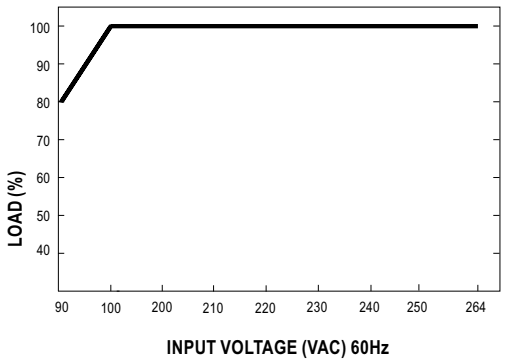

File Name: APC-35-SPEC 2017-11-03

Angst+Pfister
Sensors and Power

We are here for you. Addresses and Contacts.

Headquarter Switzerland:

Angst+Pfister Sensors and Power AG
Thurgauerstrasse 66
CH-8050 Zurich
Phone +41 44 877 35 00
sensorsandpower@angst-pfister.com

Office Germany:

Angst+Pfister Sensors and Power Deutschland GmbH
Edisonstraße 16
D-85716 Unterschleißheim
Phone +49 89 374 288 87 00
sensorsandpower.de@angst-pfister.com

Scan here and get an overview of personal contacts!

sensorsandpower.angst-pfister.com