Data Sheet

NVE ADA021-xxE
AMR Digital Switch

- Anisotropic Magnetoresitive Technology (AMR)
- Designed for Cylinder Position Sensor applications
- Digital Switch Output
- TDFN6 or MSOP8 Package
- Cannot Be Damaged By Large Magnetic Fields

Description – The ADA021 is a GMR Digital Switch product using Anisotropic Magnetoresistive material for the sensor element. This material allows the sensor to be positioned vertically in the groove of a pneumatic cylinder and detect the cylinder's magnet without any chance of double or triple switching. The part uses the same signal processing circuitry as the other AD series products available from NVE, except that electrical hysteresis in the comparator circuit is reduced to compensate for the smaller signal output from the AMR sensor element.

The magnetic operate point of the sensor is approximately 20 Oersteds, and release point is a minimum of 5 Oersteds. The operate points are stable over a temperature range of -40C to +85C. The output is configured for use as a current sinking on/off type. The IC is available in NVE's MSOP8 package or TDFN6 package (minimum order volumes and lead times may apply to the TDFN6 parts).

The following specifications are valid over all operating voltage and temperature ranges:

Parameter	Min	Typ	Max	Units
Magnetic Operate Point	18	20	25	|Oersteds|
Magnetic Release Point		16		|Oersteds|
Operating Voltage (VCC)	4.5		30	Volts
Quiescent Current Required @ 12V	2.5		4.5	mA
Output Drive Current	0		20	mA
V_{OL} at 20mA Output Drive Current[2]			0.400	Volts
Frequency Response	100			KHz
Temperature Range of Operation	-40		85	°C

Notes:
1. All specifications are valid under NVE test conditions.
2. V_{OL} at 4.5V may be higher than 0.400V; V_{OL} will meet this spec at supply voltages of 5.0 and above.
3. *Large Magnetic Fields WILL NOT cause damage to NVE AMR Sensors*
4. 1 Oe (Oersted) = 1 Gauss in air = 0.1 mT

Operation – The end user must apply a magnetic field planar with the IC package, in the direction of sensitivity of the part (cross-axis direction). This corresponds to the axial field direction in a pneumatic cylinder. As this magnetic field varies in intensity and polarity, the digital output will turn on and off. The end user must also use a pull-up or pull down resistor on the output terminal. The part is configured for pull down operation when in the "ON" state.

Experts on Design-In

Angst+Pfister Sensors and Power

Temperature Performance:

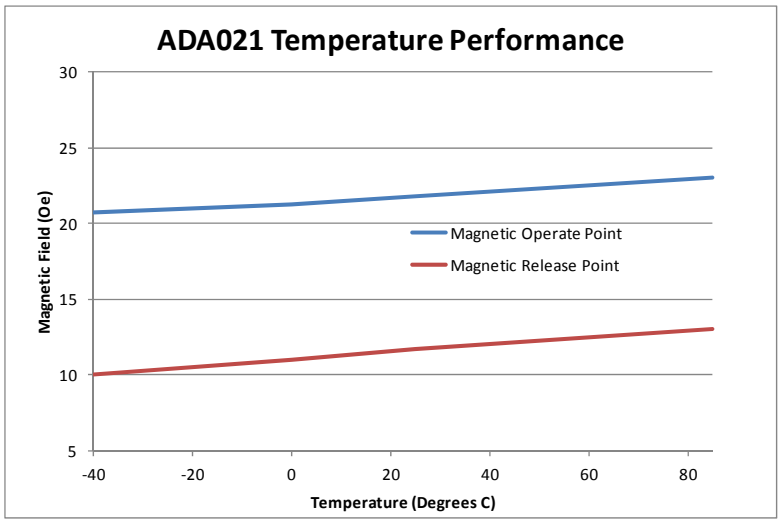

Functional Block Diagram and Pinout:

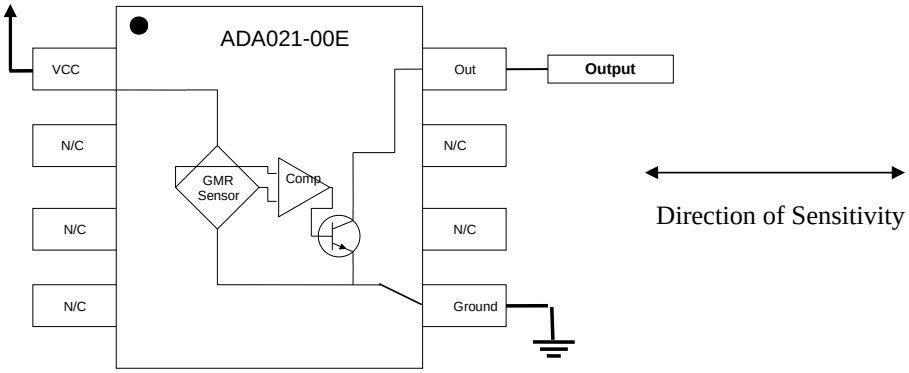

Experts on Design-In
Angst+Pfister Sensors and Power

NVE CORPORATION

ADA021-xxE Sensors

MSOP8 Package Dimensions (ADA021-00E):

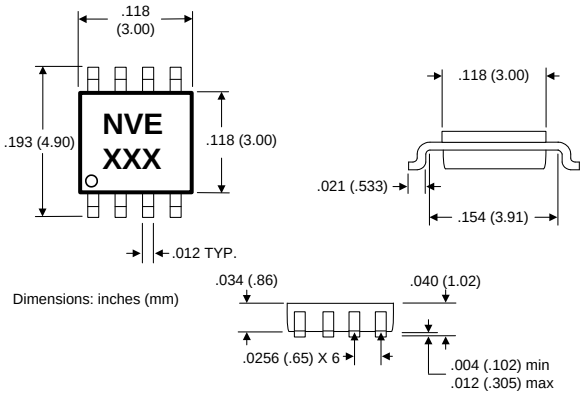

TDFN6 Package Dimensions (ADA021-10E):

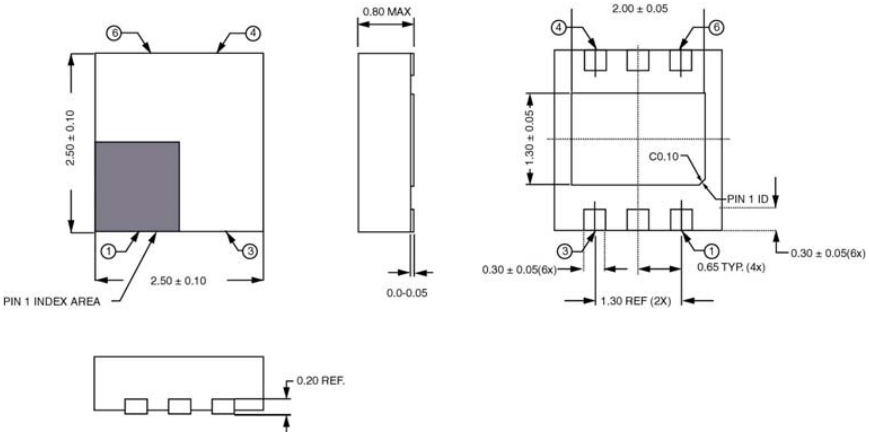

Pinout for TDFN6 package:

VCC:	Pin 1
Ground:	Pin 4
Out:	Pin 6

SB-00-042 *March 2015*

Experts on Design-In

Angst+Pfister Sensors and Power

Datasheet Limitations
The information and data provided in datasheets shall define the specification of the product as agreed between NVE and its customer, unless NVE and customer have explicitly agreed otherwise in writing. All specifications are based on NVE test protocols. In no event however, shall an agreement be valid in which the NVE product is deemed to offer functions and qualities beyond those described in the datasheet.

Limited Warranty and Liability
Information in this document is believed to be accurate and reliable. However, NVE does not give any representations or warranties, expressed or implied, as to the accuracy or completeness of such information and shall have no liability for the consequences of use of such information.

In no event shall NVE be liable for any indirect, incidental, punitive, special or consequential damages (including, without limitation, lost profits, lost savings, business interruption, costs related to the removal or replacement of any products or rework charges) whether or not such damages are based on tort (including negligence), warranty, breach of contract or any other legal theory.

Right to Make Changes
NVE reserves the right to make changes to information published in this document including, without limitation, specifications and product descriptions at any time and without notice. This document supersedes and replaces all information supplied prior to its publication.

Use in Life-Critical or Safety-Critical Applications
Unless NVE and a customer explicitly agree otherwise in writing, NVE products are not designed, authorized or warranted to be suitable for use in life support, life-critical or safety-critical devices or equipment. NVE accepts no liability for inclusion or use of NVE products in such applications and such inclusion or use is at the customer's own risk. Should the customer use NVE products for such application whether authorized by NVE or not, the customer shall indemnify and hold NVE harmless against all claims and damages.

Applications
Applications described in this datasheet are illustrative only. NVE makes no representation or warranty that such applications will be suitable for the specified use without further testing or modification.

Customers are responsible for the design and operation of their applications and products using NVE products, and NVE accepts no liability for any assistance with applications or customer product design. It is customer's sole responsibility to determine whether the NVE product is suitable and fit for the customer's applications and products planned, as well as for the planned application and use of customer's third party customers. Customers should provide appropriate design and operating safeguards to minimize the risks associated with their applications and products.

NVE does not accept any liability related to any default, damage, costs or problem which is based on any weakness or default in the customer's applications or products, or the application or use by customer's third party customers. The customer is responsible for all necessary testing for the customer's applications and products using NVE products in order to avoid a default of the applications and the products or of the application or use by customer's third party customers. NVE accepts no liability in this respect.

Limiting Values
Stress above one or more limiting values (as defined in the Absolute Maximum Ratings System of IEC 60134) will cause permanent damage to the device. Limiting values are stress ratings only and operation of the device at these or any other conditions above those given in the recommended operating conditions of the datasheet is not warranted. Constant or repeated exposure to limiting values will permanently and irreversibly affect the quality and reliability of the device.

Terms and Conditions of Sale
In case an individual agreement is concluded only the terms and conditions of the respective agreement shall apply. NVE hereby expressly objects to applying the customer's general terms and conditions with regard to the purchase of NVE products by customer.

No Offer to Sell or License
Nothing in this document may be interpreted or construed as an offer to sell products that is open for acceptance or the grant, conveyance or implication of any license under any copyrights, patents or other industrial or intellectual property rights.

Export Control
This document as well as the items described herein may be subject to export control regulations. Export might require a prior authorization from national authorities.

Automotive Qualified Products
Unless the datasheet expressly states that a specific NVE product is automotive qualified, the product is not suitable for automotive use. It is neither qualified nor tested in accordance with automotive testing or application requirements. NVE accepts no liability for inclusion or use of non-automotive qualified products in automotive equipment or applications.

In the event that customer uses the product for design-in and use in automotive applications to automotive specifications and standards, customer (a) shall use the product without NVE's warranty of the product for such automotive applications, use and specifications, and (b) whenever customer uses the product for automotive applications beyond NVE's specifications such use shall be solely at customer's own risk, and (c) customer fully indemnifies NVE for any liability, damages or failed product claims resulting from customer design and use of the product for automotive applications beyond NVE's standard warranty and NVE's product specifications.

Experts on Design-In

Angst+Pfister Sensors and Power

Angst+Pfister
Sensors and Power

We are here for you. Addresses and Contacts.

Headquarter Switzerland:

Angst+Pfister Sensors and Power AG
Thurgauerstrasse 66
CH-8050 Zurich
Phone +41 44 877 35 00
sensorsandpower@angst-pfister.com

Office Germany:

Angst+Pfister Sensors and Power Deutschland GmbH
Edisonstraße 16
D-85716 Unterschleißheim
Phone +49 89 374 288 87 00
sensorsandpower.de@angst-pfister.com

Scan here and get an overview of personal contacts!

sensorsandpower.angst-pfister.com