NVE CORPORATION

Data Sheet

AAT002-10E TMR Angle Sensor

Key Features

- Tunneling Magnetoresistance (TMR) Technology
- Very High Output Signal Without Amplification
- Wide Airgap Tolerance
- Very High Resistance for Extremely Low Power
- Sine and Cosine Outputs Available
- Ultraminiature TDFN6 Package

Typical Applications

- Rotary Encoders
- Automotive Rotary Position Sensors
- Motor Shaft Position Sensors
- Knob Position Sensors

Description

The AAT002-10E angle sensor is a unique array of four Tunneling Magnetoresistance (TMR) elements rotated at 90 degree intervals in the package and connected in a bridge configuration. The output can be configured to represent the sine and cosine functions of the magnetic field applied to the sensor. Each TMR sensor element has a resistance of approximately 1.25 megaohms. Outputs are proportional to the supply voltage and peak-to-peak output voltages are much larger than other sensor technologies. The part is packaged in NVE's 2.5 mm x 2.5 mm x 0.8 mm TDFN6 surface mount package.

Operation

Each sensor elements contain two magnetic layers: a "pinned," or fixed direction layer; and a movable-direction, or "free" layer. The diagram below illustrates the configuration, using arrows to represent the two layers:

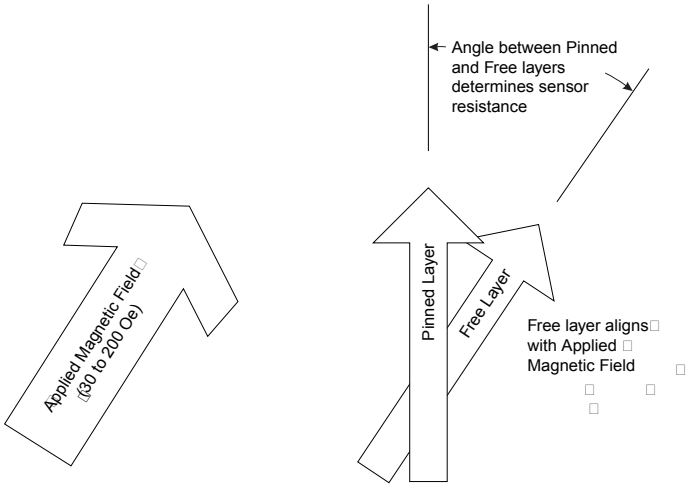

NVE CORPORATION

AAT002-10E TMR Sensor

An external magnet provides a saturating magnetic field (30 to 200 Oe) in the plane of the sensor, as illustrated below for a bar magnet and a split-pole magnet:

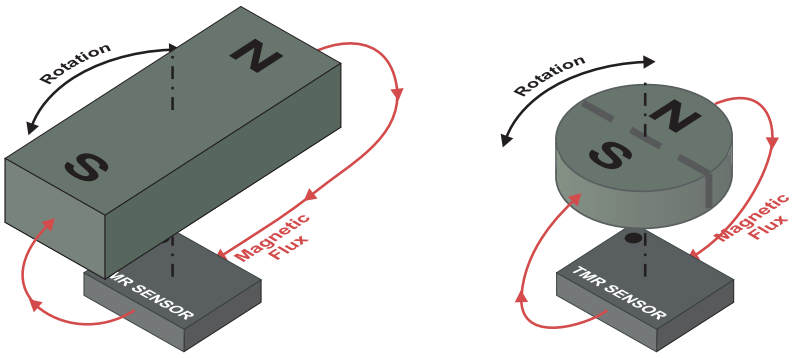

The sensor element free layers will align with the external field. As the applied field changes direction, the angle between the free layer and the pinned layer changes, changing the resistance of TMR elements, which changes the device output voltages.

Variations in the air gap between the magnet and the sensor element will cause slight changes in the output depending on the size and strength of the external magnet. The following chart shows a typical sensor output versus the angle of applied field using a 12 mm diameter, 4 mm thick split-pole ferrite magnet and a 5 V supply with three different air gaps:

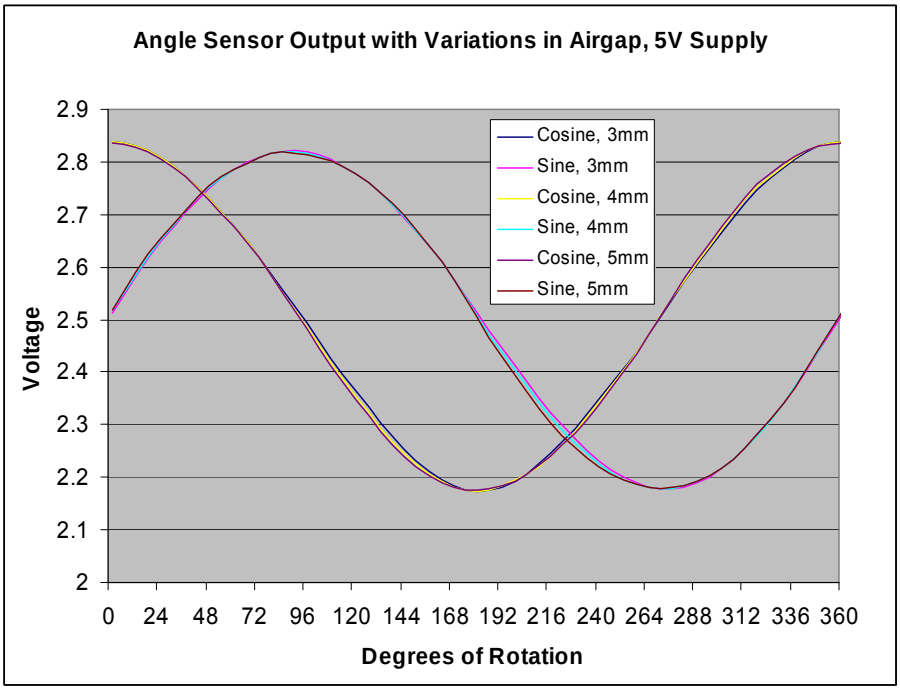

NVE CORPORATION

AAT002-10E TMR Sensor

Functional Block Diagram, Marking, and Pinout

The AAT002-10E package is marked "FCVe." The device contains four sensing resistors with the pinned layer 90 degrees apart. The resistors are connected as two half-bridges, providing sine and cosine outputs:

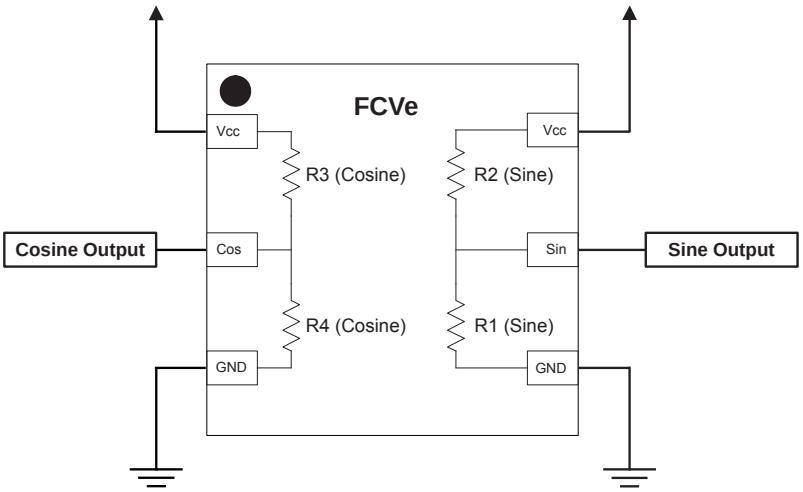

Operating Specifications

Parameter	Test Condition	Min.	Typ.	Max.	Units
Resistance (Each Resistor)[6]	25°C	0.6	1.25	2.5	MΩ
Peak-to-Peak Signal Level	Operating at 25°C	130	160	180	mV/V
Required Applied Magnetic Field Strength	Operating	30		200	Oe[2]
Angular Measurement Error, Variable Bias[3]	Operating			3	Angular Degrees
Angular Measurement Error, Fixed Bias[4]	Operating			0.5	Angular Degrees
Supply Voltage	Operating			5.5	V
Offset Voltage	Operating at 25°C	−10		10	mV/V
Temperature Range of Operation	Operating	−40		125	°C
Temperature Coefficient of Resistance	Operating		+0.09		%/°C
TCOV[5]	Operating		−0.13		%/°C

Absolute Maximum Ratings

Parameter	Min.	Typ.	Max.	Units
Supply Voltage			7	Volts
Storage Temperature	−40		170	°C
ESD (Human Body Model)			2,000	Volts
Applied Magnetic Field[1]			Unlimited	Oe

Notes:

1. Large magnetic fields CANNOT damage NVE sensors.
2. 1 Oe (Oersted) = 1 Gauss in air = 0.1 millitesla = 79.8 A/m.
3. Variable Bias means the magnetic field strength at the sensor can vary across the specification range; this is the same as a variable airgap between the bias magnet and the sensor.
4. Fixed Bias means the magnetic field strength at the sensor is constant; this is the same as a fixed airgap between the bias magnet and the sensor.
5. TCOV is the percent change in voltage signal over temperature with a constant supply voltage.
6. Resistance is specified with the saturating magnetic field applied.

NVE Corporation • 11409 Valley View Road, Eden Prairie, MN 55344-3617 • (952) 829-9217 • www.nve.com

Experts on Design-In

Angst+Pfister Sensors and Power

NVE CORPORATION

AAT002-10E TMR Sensor

Package Drawing – TDFN6 2.5 mm x 2.5 mm

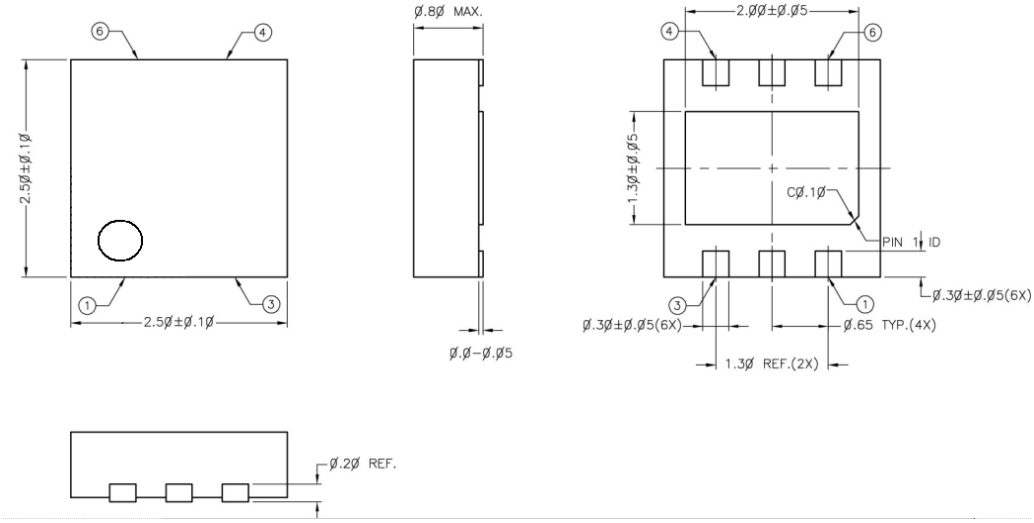

Notes:

- Dimensions in mm.
- The center pad may be left floating or connected to ground.

RoHS COMPLIANT

The information provided by NVE Corporation is believed to be accurate. However, no responsibility is assumed by NVE Corporation for its use, nor for any infringement of patents, nor rights or licenses granted to third parties, which may result from its use. No license is granted by implication, or otherwise, under any patent or patent rights of NVE Corporation. NVE Corporation does not authorize, nor warrant, this product for use in life support devices or systems or other critical applications.

Specifications are subject to change without notice.

SB-00-024; April 8, 2015

NVE Corporation • 11409 Valley View Road, Eden Prairie, MN 55344-3617 • (952) 829-9217 • www.nve.com

NVE CORPORATION

AAT002-10E TMR Sensor

Datasheet Limitations
The information and data provided in datasheets shall define the specification of the product as agreed between NVE and its customer, unless NVE and customer have explicitly agreed otherwise in writing. All specifications are based on NVE test protocols. In no event however, shall an agreement be valid in which the NVE product is deemed to offer functions and qualities beyond those described in the datasheet.

Limited Warranty and Liability
Information in this document is believed to be accurate and reliable. However, NVE does not give any representations or warranties, expressed or implied, as to the accuracy or completeness of such information and shall have no liability for the consequences of use of such information.

In no event shall NVE be liable for any indirect, incidental, punitive, special or consequential damages (including, without limitation, lost profits, lost savings, business interruption, costs related to the removal or replacement of any products or rework charges) whether or not such damages are based on tort (including negligence), warranty, breach of contract or any other legal theory.

Right to Make Changes
NVE reserves the right to make changes to information published in this document including, without limitation, specifications and product descriptions at any time and without notice. This document supersedes and replaces all information supplied prior to its publication.

Use in Life-Critical or Safety-Critical Applications
Unless NVE and a customer explicitly agree otherwise in writing, NVE products are not designed, authorized or warranted to be suitable for use in life support, life-critical or safety-critical devices or equipment. NVE accepts no liability for inclusion or use of NVE products in such applications and such inclusion or use is at the customer's own risk. Should the customer use NVE products for such application whether authorized by NVE or not, the customer shall indemnify and hold NVE harmless against all claims and damages.

Applications
Applications described in this datasheet are illustrative only. NVE makes no representation or warranty that such applications will be suitable for the specified use without further testing or modification.

Customers are responsible for the design and operation of their applications and products using NVE products, and NVE accepts no liability for any assistance with applications or customer product design. It is customer's sole responsibility to determine whether the NVE product is suitable and fit for the customer's applications and products planned, as well as for the planned application and use of customer's third party customers. Customers should provide appropriate design and operating safeguards to minimize the risks associated with their applications and products.

NVE does not accept any liability related to any default, damage, costs or problem which is based on any weakness or default in the customer's applications or products, or the application or use by customer's third party customers. The customer is responsible for all necessary testing for the customer's applications and products using NVE products in order to avoid a default of the applications and the products or of the application or use by customer's third party customers. NVE accepts no liability in this respect.

Limiting Values
Stress above one or more limiting values (as defined in the Absolute Maximum Ratings System of IEC 60134) will cause permanent damage to the device. Limiting values are stress ratings only and operation of the device at these or any other conditions above those given in the recommended operating conditions of the datasheet is not warranted. Constant or repeated exposure to limiting values will permanently and irreversibly affect the quality and reliability of the device.

Terms and Conditions of Sale
In case an individual agreement is concluded only the terms and conditions of the respective agreement shall apply. NVE hereby expressly objects to applying the customer's general terms and conditions with regard to the purchase of NVE products by customer.

No Offer to Sell or License
Nothing in this document may be interpreted or construed as an offer to sell products that is open for acceptance or the grant, conveyance or implication of any license under any copyrights, patents or other industrial or intellectual property rights.

Export Control
This document as well as the items described herein may be subject to export control regulations. Export might require a prior authorization from national authorities.

Automotive Qualified Products
Unless the datasheet expressly states that a specific NVE product is automotive qualified, the product is not suitable for automotive use. It is neither qualified nor tested in accordance with automotive testing or application requirements. NVE accepts no liability for inclusion or use of non-automotive qualified products in automotive equipment or applications.

In the event that customer uses the product for design-in and use in automotive applications to automotive specifications and standards, customer (a) shall use the product without NVE's warranty of the product for such automotive applications, use and specifications, and (b) whenever customer uses the product for automotive applications beyond NVE's specifications such use shall be solely at customer's own risk, and (c) customer fully indemnifies NVE for any liability, damages or failed product claims resulting from customer design and use of the product for automotive applications beyond NVE's standard warranty and NVE's product specifications.

NVE Corporation • 11409 Valley View Road, Eden Prairie, MN 55344-3617 • (952) 829-9217 • www.nve.com

Angst+Pfister
Sensors and Power

We are here for you. Addresses and Contacts.

Headquarter Switzerland:

Angst+Pfister Sensors and Power AG
Thurgauerstrasse 66
CH-8050 Zurich
Phone +41 44 877 35 00
sensorsandpower@angst-pfister.com

Office Germany:

Angst+Pfister Sensors and Power Deutschland GmbH
Edisonstraße 16
D-85716 Unterschleißheim
Phone +49 89 374 288 87 00
sensorsandpower.de@angst-pfister.com

Scan here and get an overview of personal contacts!

sensorsandpower.angst-pfister.com